ÖZLER
KALIP ve İSKELE
96'dan beri çözüm ortağınız

KAPLAMASIZ UNISCAFF-F FLANŞLI-KAMALI GÜVENLİ DIŞ İSKELE SİSTEMİ STATİK HESAP RAPORU

TS EN 12810-4D-SW06/300 H1-A/B-LS

TSE

KASIM 2016

1. İÇİNDEKİLER

1. İÇİNDEKİLER 2
2. RAPOR KONUSU VE ÖZETİ 3
3. DİKKATE ALINAN STANDARTLAR 3
4. ANALİZ MODELİ 3
5. MODELDE KULLANILAN KESİTLER VE STATİK ÖZELLİKLERİ 21
6. MODELDE KULLANILAN MALZEMELERİN MEKANİK ÖZELLİKLERİ 23
7. Duvar ankrajı ve taban mesnetleri 24
8. Dikme, yatay eleman ve çaprazların birleşim şekline ait değerler 26
9. YÜK DURUMLARI 27
   9.1. Ölü Yükler 27
   9.2. Servis Yükleri 27
   9.3. Rüzgar Yükleri 27
10. YÜK KOMBİNASYONLARI VE KOMBİNASYON FAKTÖRLERİ 28
11. Nonlinear Kombinasyonlar 28
12. Result classes 29
13. Stabilite Kombinasyonları 29
14. Sistem Tasarımı 29
15. YÜK ANALİZİ 30
   15.1. Servis yükü durumu (S) (S1) 30
   15.2. Rüzgar Yükleri 30
16. Rüzgar kuvvetinden dolayı duvar ankrajlarına gelen en büyük kuvvet 37
17. Taban mesnetlerine gelen kuvvetler 38
18. ELEMANLARIN ÜZERİNDEKİ YÜKLER 39
19. ELEMANLARDAKİ İÇ KUVVETLER 83
20. Deplasmanlar SLS 84
21. Deplasmanlar NC SLS 84
22. HERBİR KESİTİN DAYANIM TAHKİKİ 86
23. SEHİMLERİN KONTROLÜ 114
24. SONUÇ 114

2. RAPOR KONUSU VE ÖZETİ

Bu raporda ÖZLER KALIP ve İSKELE' ye ait olan flanşlı tip güvenli dış cephe iskelesinin TSE' nin belirlemiş olduğu yönetmeliklere göre statik hesabı anlatılmaktadır. Hesaplar iskelenin kaplamasız olduğu, 30 m * 24 m boyutlarındaki bina cephesine kurulduğu ve uzun yönde 300 cm kısa yönde 70 cm lik yataylar kullanıldığı varsayılarak yapılmıştır.

İskele ana taşıyıcı sistemini oluşturan dikmeler Ø48*3,0 mm lik borudan imal edilmiştir. Dikme boyları iskele sistemine ve tercihlere göre 50 cm, 100 cm, 150 cm, 200 cm, 250 cm veya 300 cm lik boru profillerden oluşturulabilir. İskelenin yatayda ana ve ara korkuluklarını oluşturan yatay bağlantılar Ø48*2.5mm lik borudan imal edilmiştir. İskele stabilitesini sağlayan çapraz bağlantılar Ø48*2.5mm lik borudan imal edilmiştir. Yürüme platformu olarak 32cm genişliğinde, 1,35mm sacdan bükme kalas kullanılmıştır. Topukluk (tekmelik, süpürgelik) elemanı 15 cm yüksekliğindedir ve 1mm lik sacdan bükülerek imal edilmiştir. Ana ve ara korkuluklar Ø48*3,0 mm borudan imal edilmiştir. Bu elemanlardan oluşan taşıyıcı sistem alt ayar millerinin üzerine oturur.

3. DİKKATE ALINAN STANDARTLAR

Hesapta TS-EN12810-1, TS-EN12810-2, TS-EN12811-1, TS-EN12811-2 ve TS-EN12811-3 standartlarından yararlanılmıştır.

4. ANALİZ MODELİ

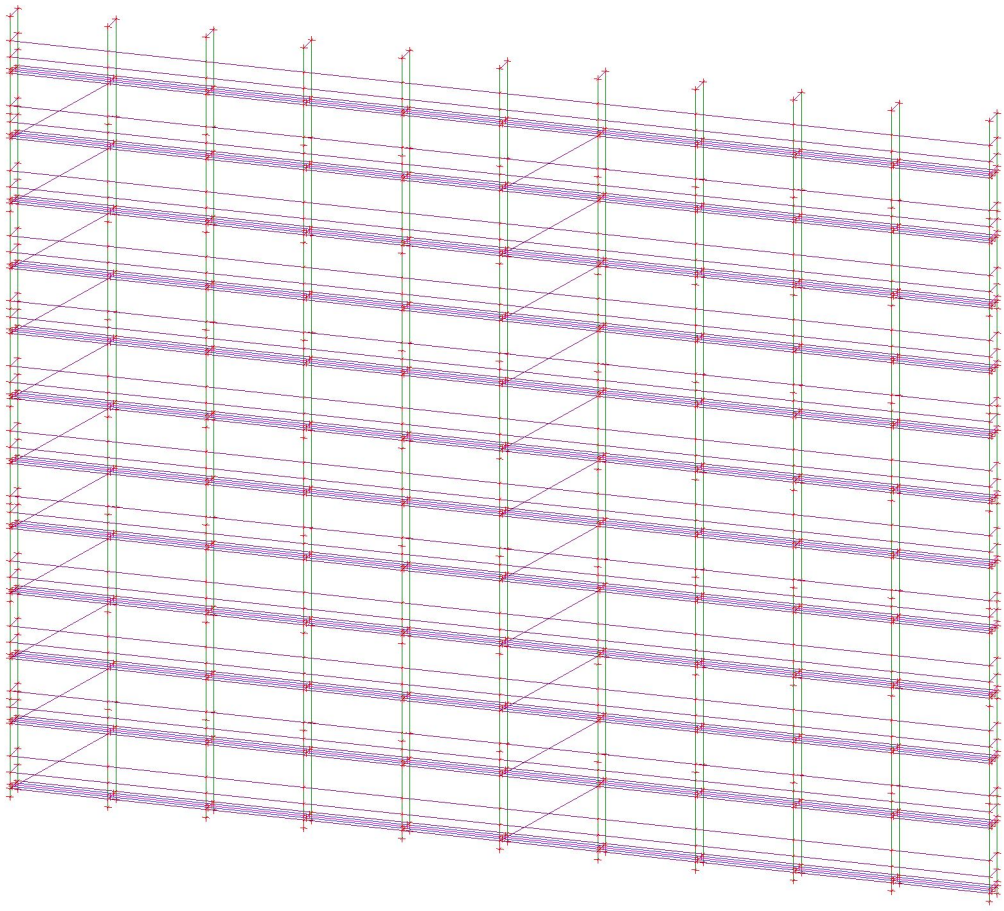

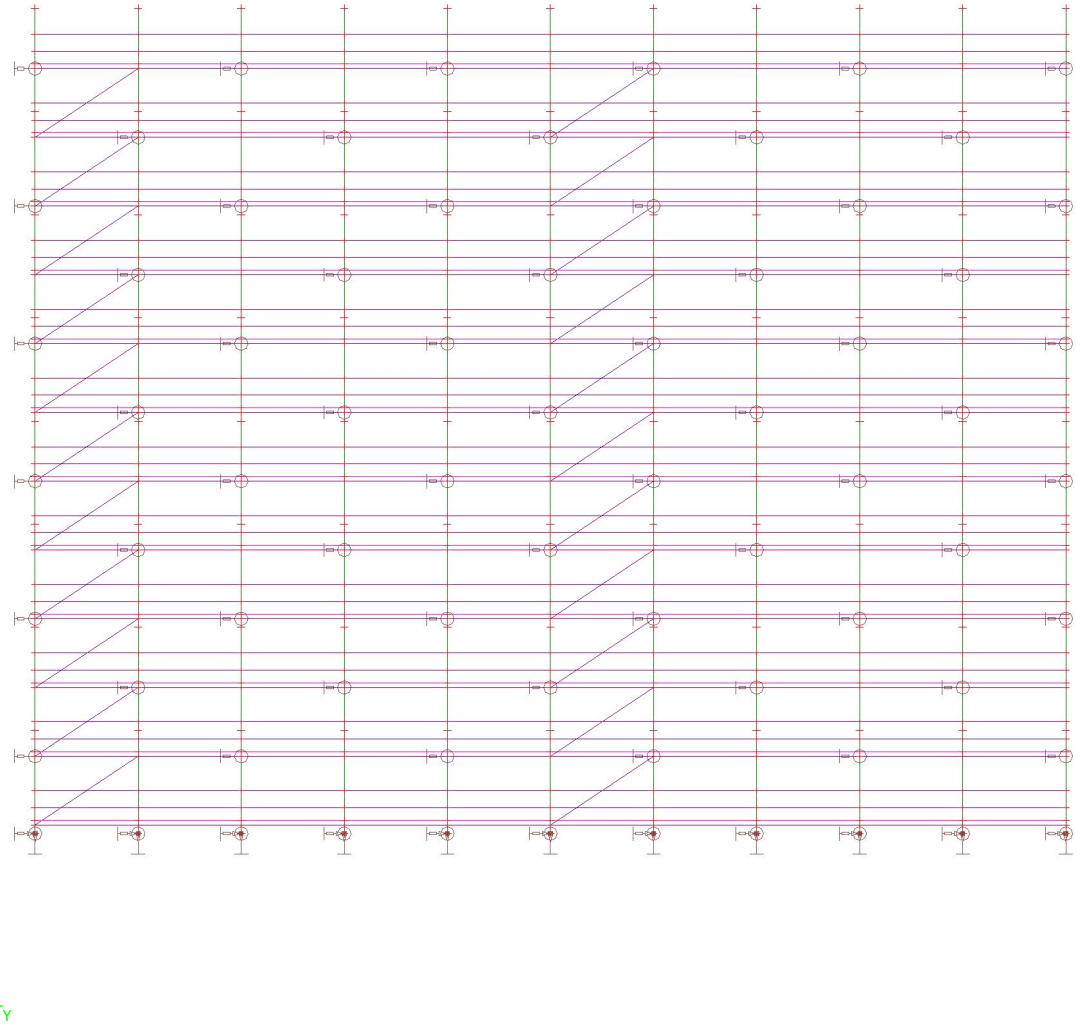

Şekil 4.2 : Ankraj Konfigürasyonu (4m de 1 şaşırtmalı olacak şekilde uygulanmıştır.)

Analizde kullanılan flanşlı tip iskele elemanlarının teknik çizimleri sonraki 16 sayfada her sayfada bir eleman olacak şekilde verilmiştir.

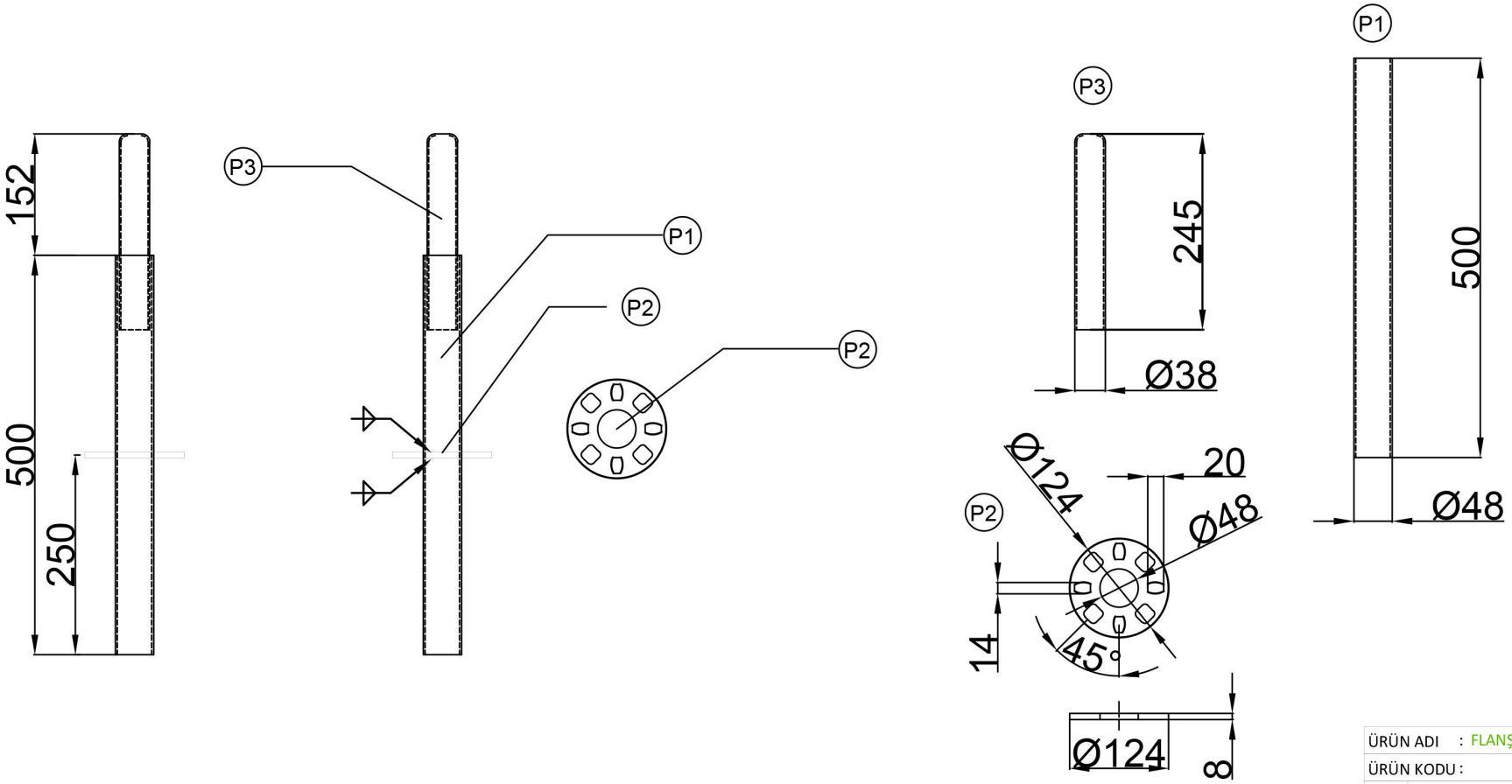

ÜRÜN ADI	: FLANŞLI DİKME 050-1F
ÜRÜN KODU :	

POZ NO	MALZEME ADI	KESİM ÖLÇÜSÜ	ADET	AĞIRLIK
P1	BORU Ø48*3 mm	500mm	1	0,00kg
P2	8mm FLANŞ SACI	Ø124mm	1	0,00kg
P3	KLAVUZ Ø38*2,5 mm	245mm	1	0,00kg

ÖZLER
KALIP ve İSKELE
www.ozleriskele.com - proje@ozleriskele.com

ÇİZİM	: BURAK UĞURLU
KONTROL	: BERKAN ÖZELCİ
TARİH	: 04.10.2016

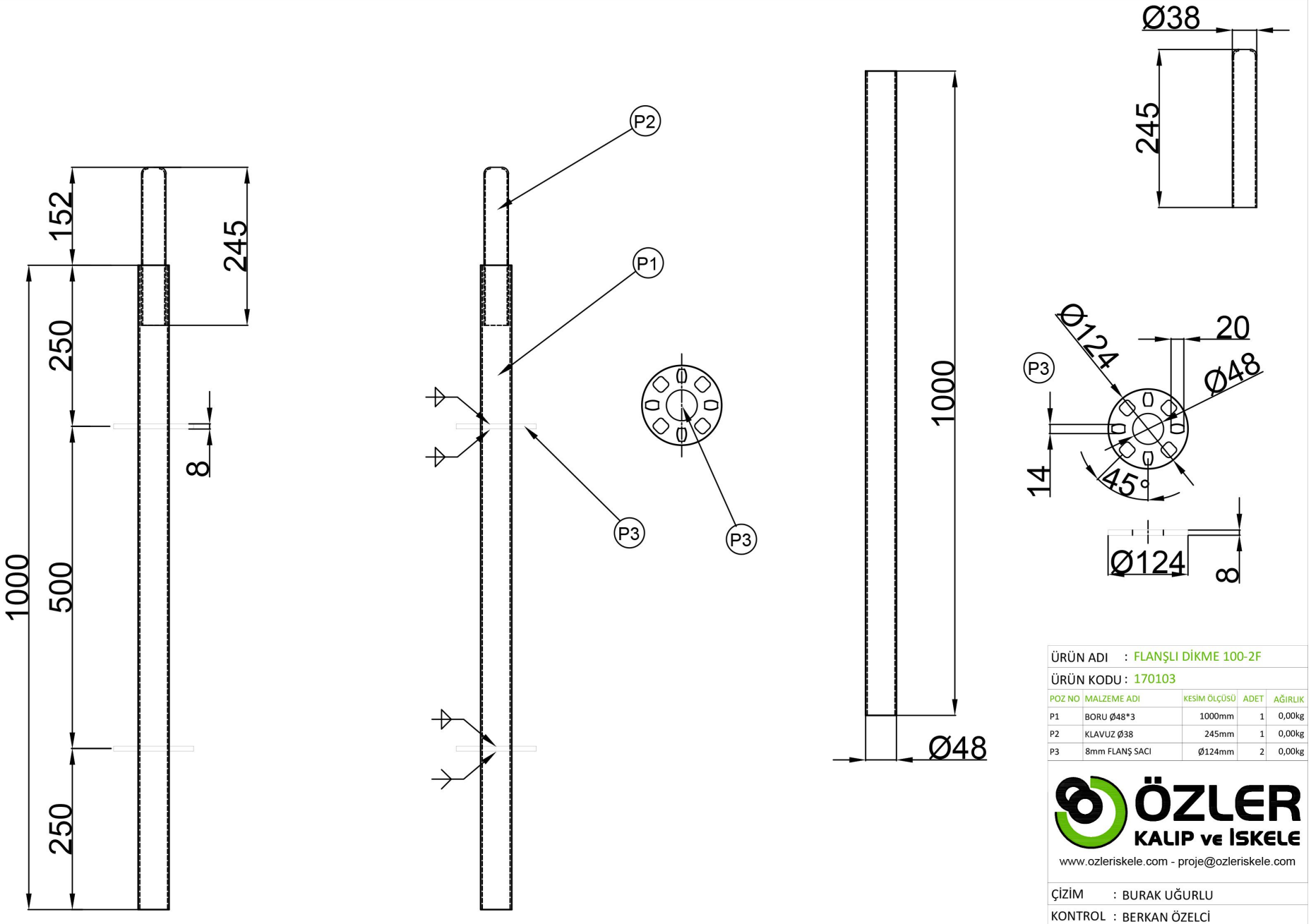

ÜRÜN ADI : FLANŞLI DİKME 100-2F				
ÜRÜN KODU : 170103				
POZ NO	MALZEME ADI	KESİM ÖLÇÜSÜ	ADET	AĞIRLIK
P1	BORU Ø48*3	1000mm	1	0,00kg
P2	KLAVUZ Ø38	245mm	1	0,00kg
P3	8mm FLANŞ SACI	Ø124mm	2	0,00kg

ÖZLER
KALIP ve İSKELE
www.ozleriskele.com - proje@ozleriskele.com

ÇİZİM : BURAK UĞURLU
KONTROL : BERKAN ÖZELCİ
TARİH : 03.10.2016

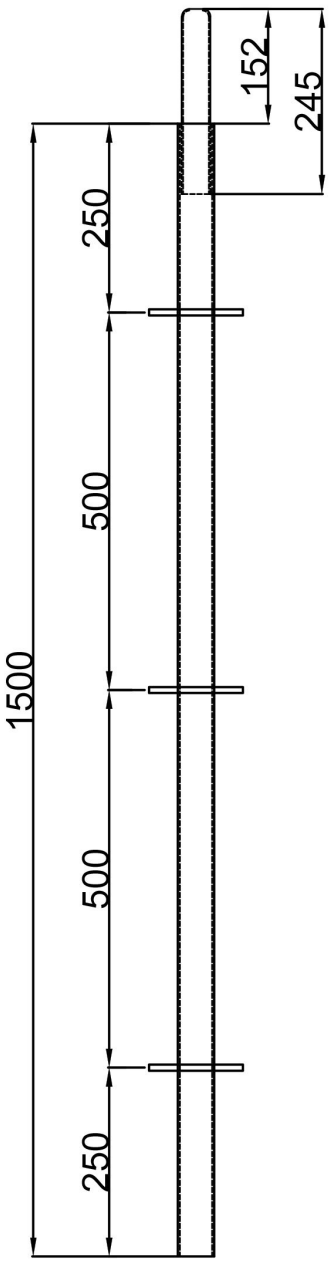

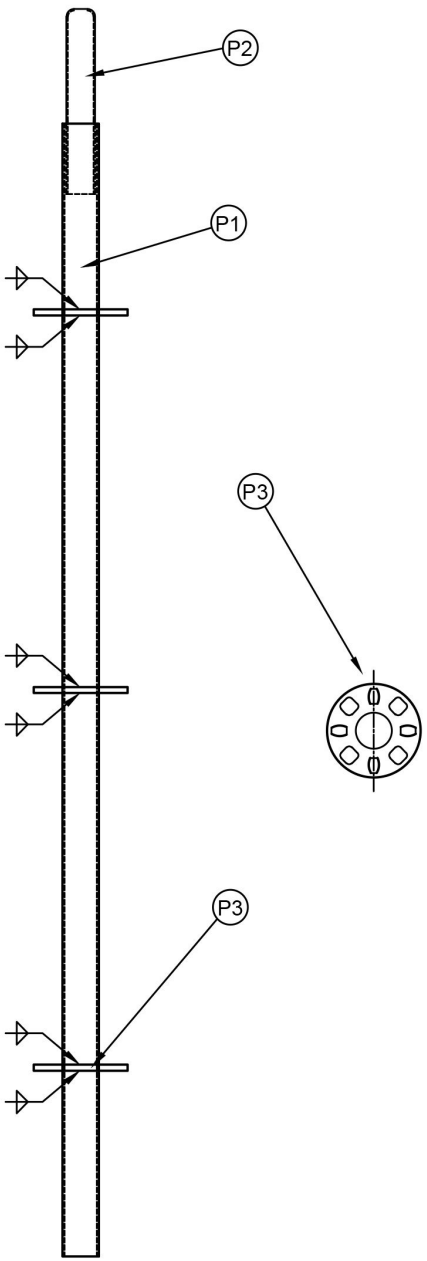

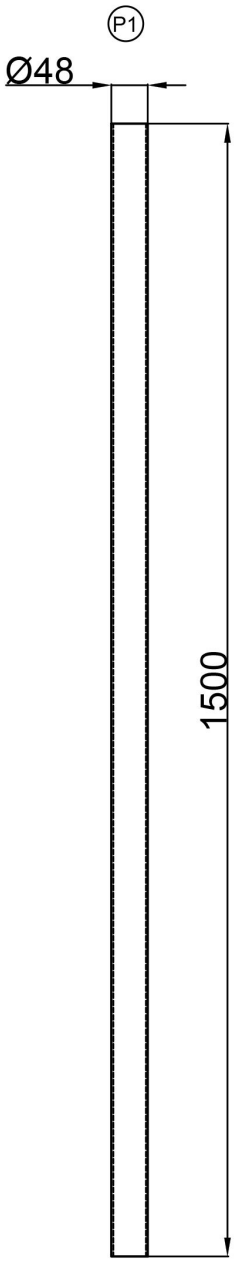

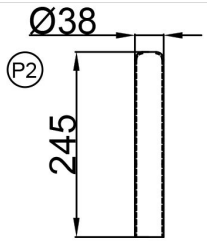

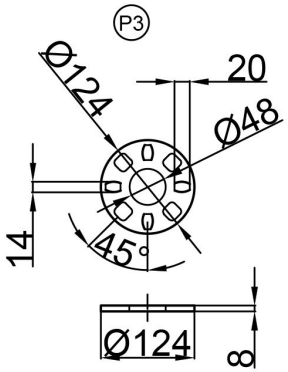

ÜRÜN ADI :	FLANŞLI DİKME 150-3F			
ÜRÜN KODU :	170202			
POZ NO	MALZEME ADI	KESİM ÖLÇÜSÜ	ADET	AĞIRLIK
P1	BORU Ø48*3	1500mm	1	0,00kg
P2	KLAVUZ Ø38*2,5	245mm	1	0,00kg
P3	8 mm FLANŞ SACI	Ø124mm	3	0,00kg

ÖZLER
KALIP ve İSKELE
www.ozleriskele.com - proje@ozleriskele.com

ÇİZİM : BURAK UĞURLU
KONTROL : BERKAN ÖZELCİ
TARİH : 03.10.2016

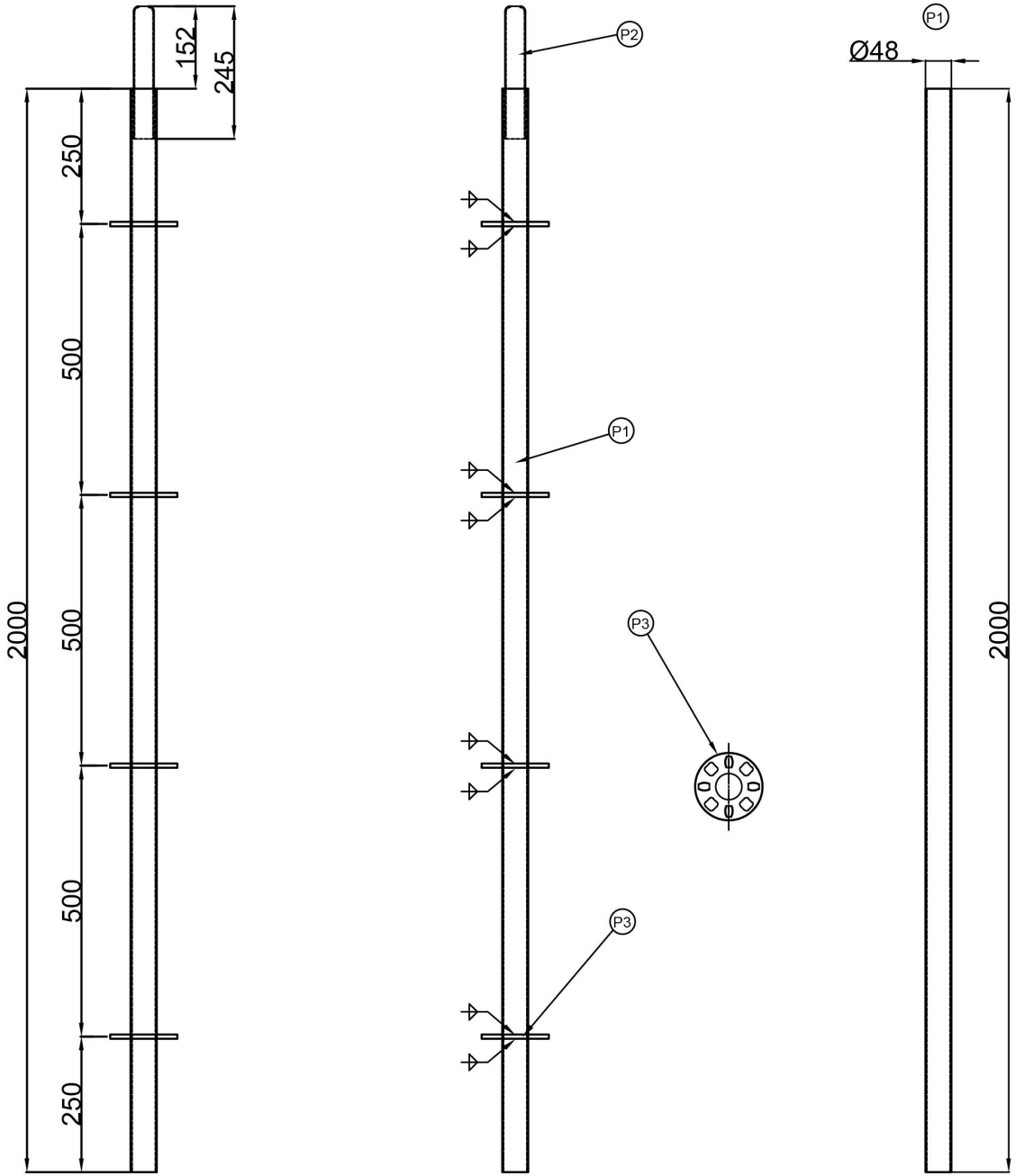

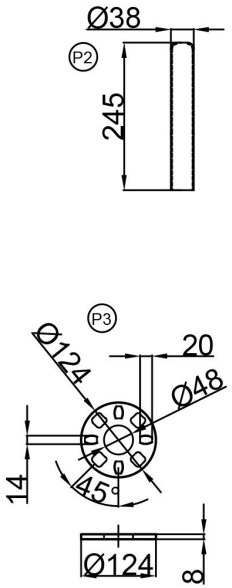

ÜRÜN ADI :	FLANŞLI DİKME 200-4F			
ÜRÜN KODU :	170302			
POZ NO	MALZEME ADI	KESİM ÖLÇÜSÜ	ADET	AĞIRLIK
P1	BORU Ø48*3	2000mm	1	0,00kg
P2	KLAVUZ Ø38*2,5	245mm	1	0,00kg
P3	8mm FLANŞ SACI	Ø124mm	4	0,00kg

ÖZLER KALIP ve İSKELE

www.ozleriskele.com - proje@ozleriskele.com

ÇİZİM : BURAK UĞURLU

KONTROL : BERKAN ÖZELCİ

TARİH : 03.10.2016

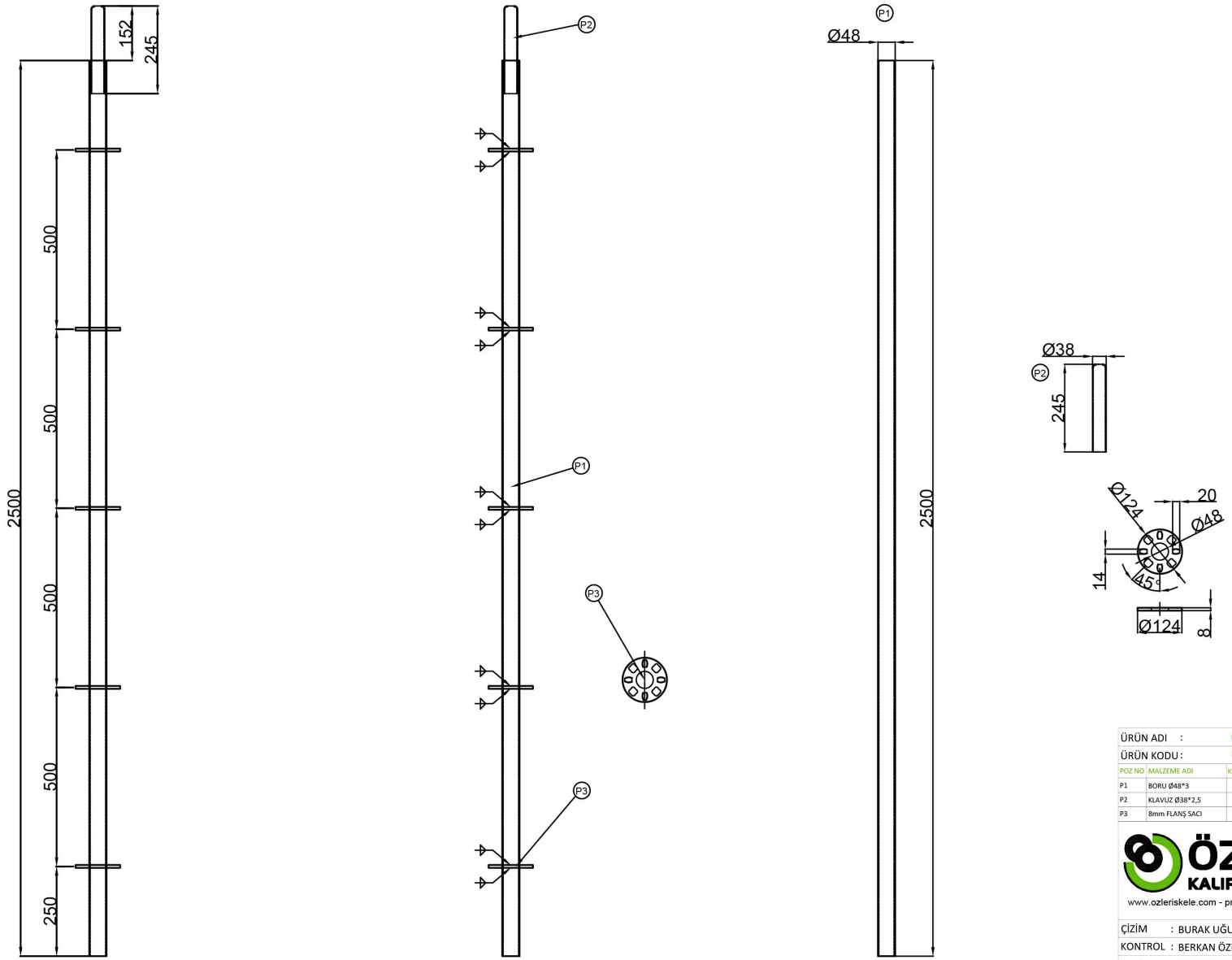

ÜRÜN ADI :		FLANŞLI DİKME 250-5F		
ÜRÜN KODU :		170402		
POZ NO	MALZEME ADI	KESİM ÖLÇÜSÜ	ADET	AĞIRLIK
P1	BORU Ø48*3	2500mm	1	0,00kg
P2	KLAVUZ Ø38*2,5	245mm	1	0,00kg
P3	8mm FLANŞ SACI	Ø124mm	5	0,00kg

ÖZLER
KALIP ve İSKELE
www.ozleriskele.com - proje@ozleriskele.com

ÇİZİM : BURAK UĞURLU
KONTROL : BERKAN ÖZELCİ
TARİH : 03.10.2016

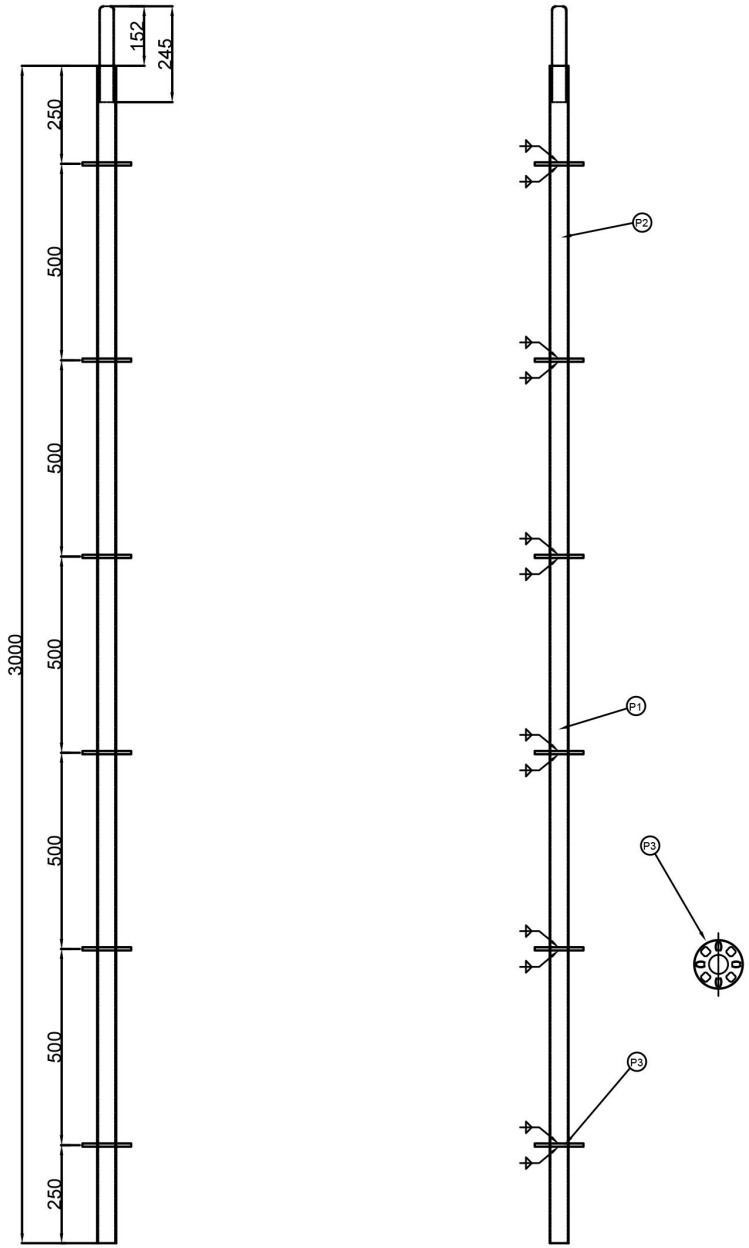

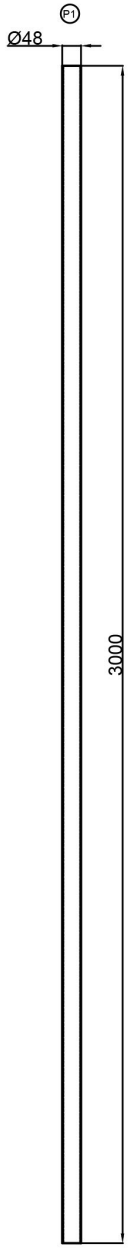

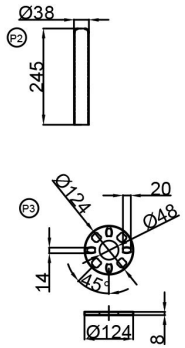

ÜRÜN ADI :		FLANŞLI DİKME 300-6F		
ÜRÜN KODU :		170502		
POZ NO	MALZEME ADI	KESİM ÖLÇÜSÜ	ADET	AĞIRLIK
P1	BORU Ø48*3	3000mm	1	0,00kg
P2	KLAVUZ Ø38*2,5	245mm	1	0,00kg
P3	8mm FLANŞ SACI	Ø124mm	6	0,00kg

ÖZLER KALIP ve İSKELE

www.ozleriskele.com - proje@ozleriskele.com

ÇİZİM : BURAK UĞURLU

KONTROL : BERKAN ÖZELCİ

TARİH : 03.10.2016

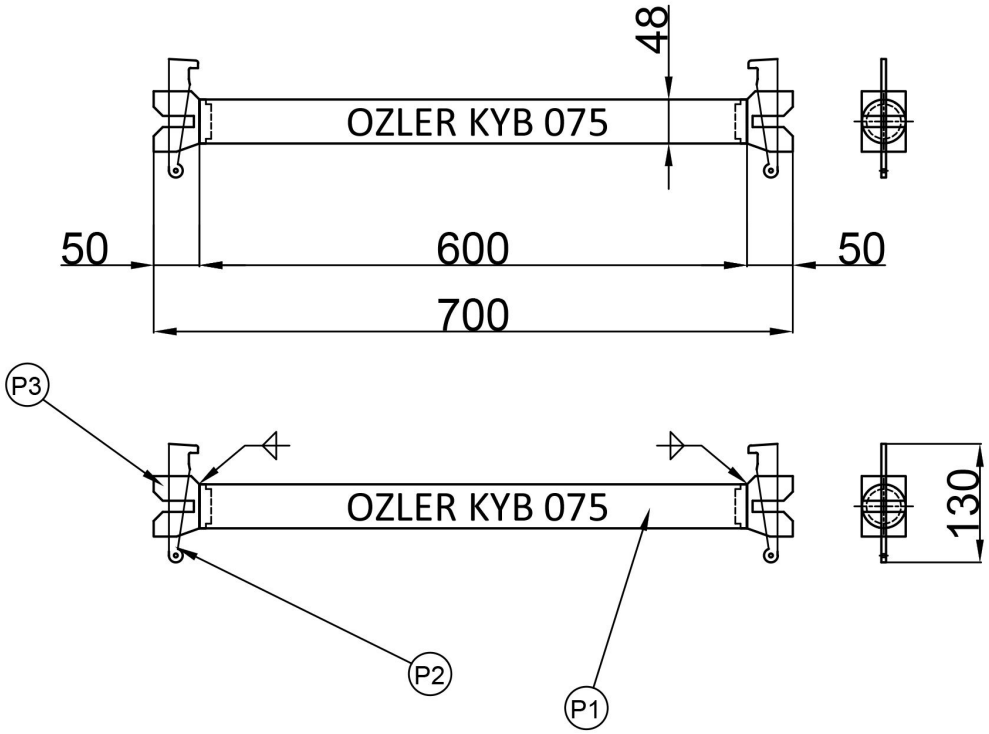

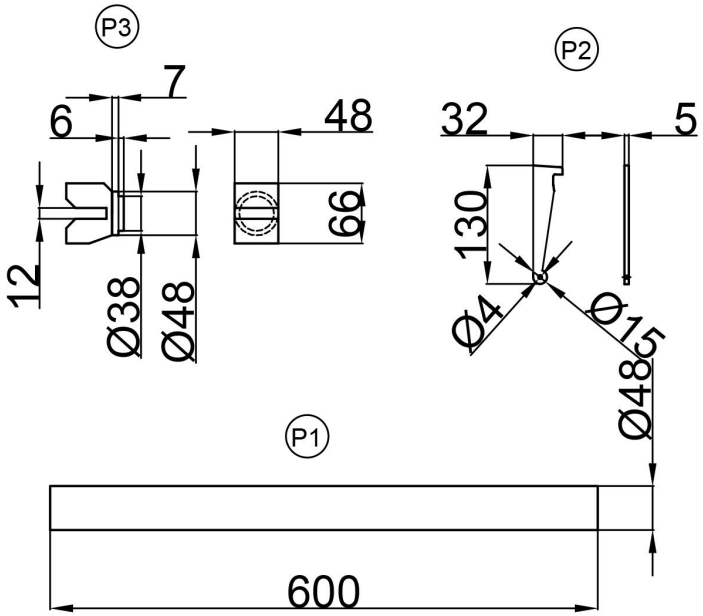

ÜRÜN ADI : KAMALI YATAY BAĞLANTI 075				
ÜRÜN KODU : 170601				
POZ NO	MALZEME ADI	KESİM ÖLÇÜSÜ	ADET	AĞIRLIK
P1	BORU Ø48*2,5 mm	600mm	1	0,00kg
P2	KAMA	H:130mm	2	0,00kg
P3	KURT AĞZI DÖKÜM		2	0,00kg

ÖZLER
KALIP ve İSKELE
www.ozleriskele.com - proje@ozleriskele.com

ÇİZİM : BURAK UĞURLU
KONTROL : BERKAN ÖZELCİ
TARİH : 03.10.2016

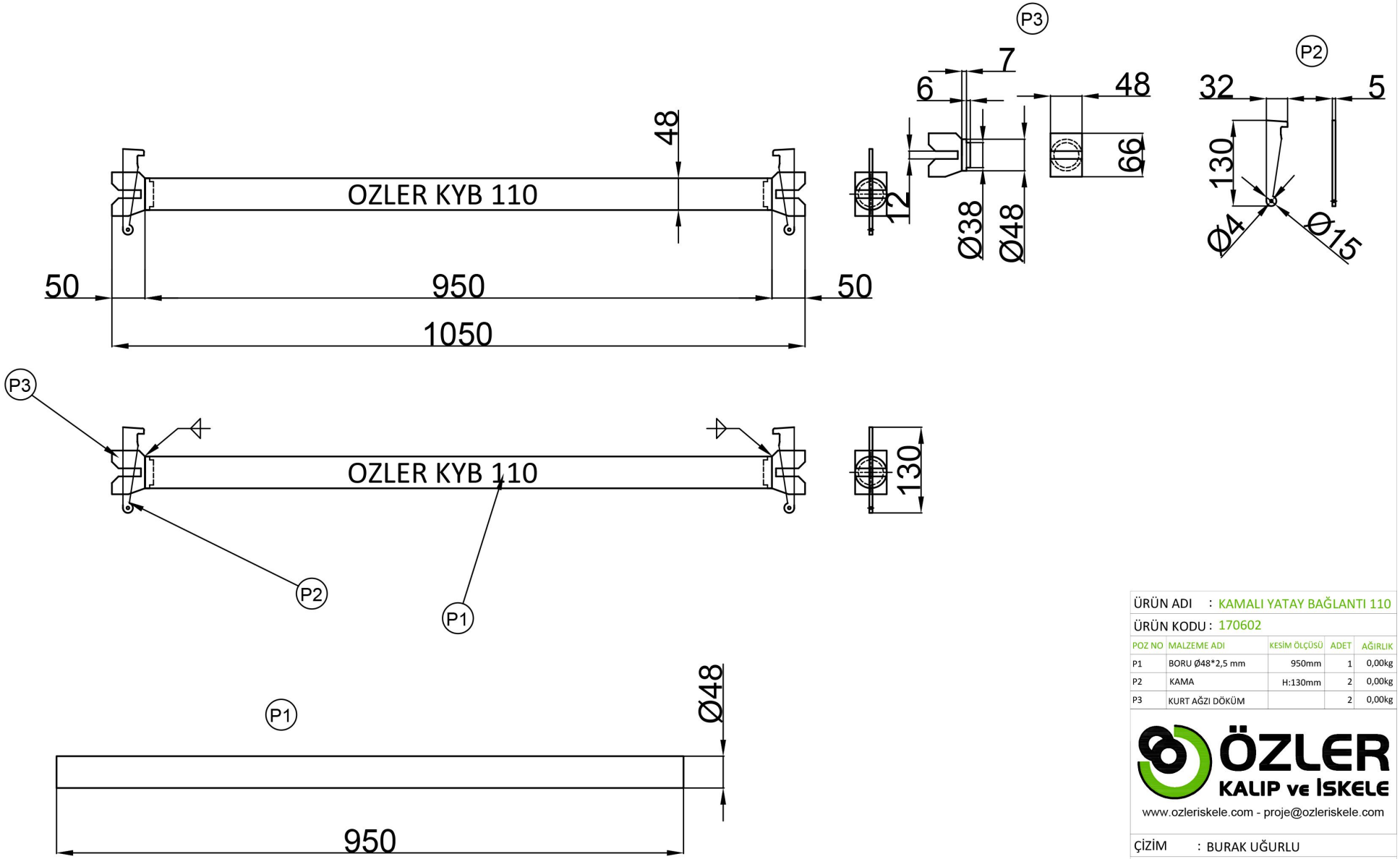

ÜRÜN ADI : KAMALI YATAY BAĞLANTI 110

ÜRÜN KODU : 170602

POZ NO	MALZEME ADI	KESİM ÖLÇÜSÜ	ADET	AĞIRLIK
P1	BORU Ø48*2,5 mm	950mm	1	0,00kg
P2	KAMA	H:130mm	2	0,00kg
P3	KURT AĞZI DÖKÜM		2	0,00kg

ÖZLER KALIP ve İSKELE

www.ozleriskele.com - proje@ozleriskele.com

ÇİZİM : BURAK UĞURLU

KONTROL : BERKAN ÖZELCİ

TARİH : 03.10.2016

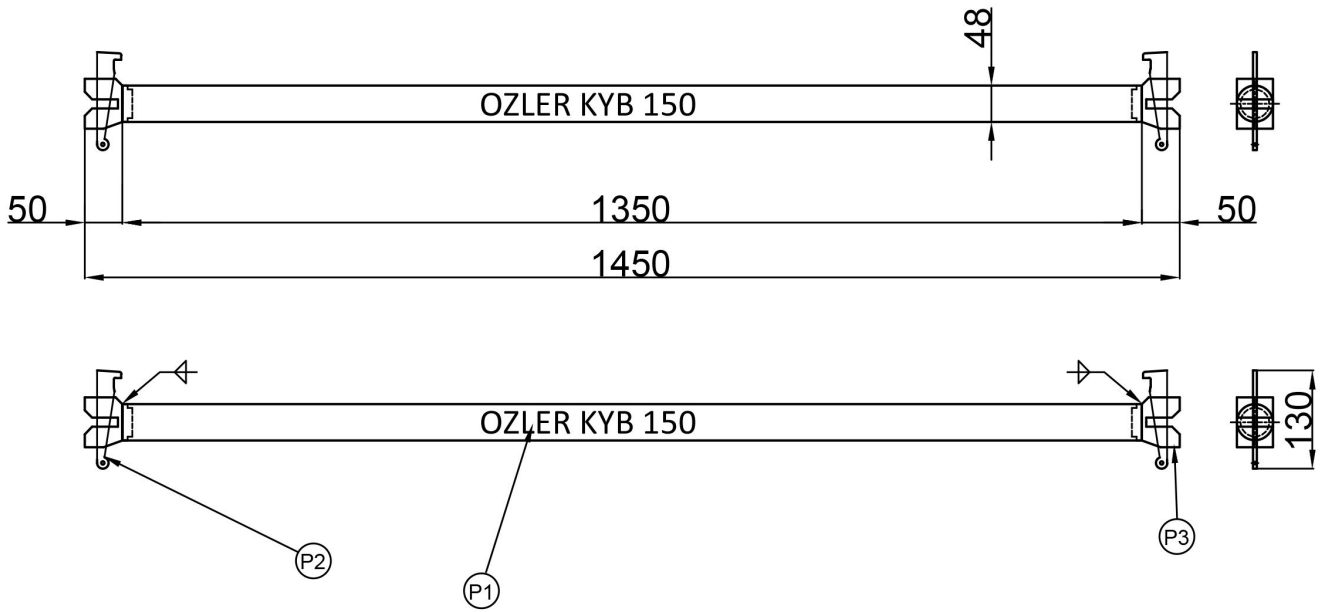

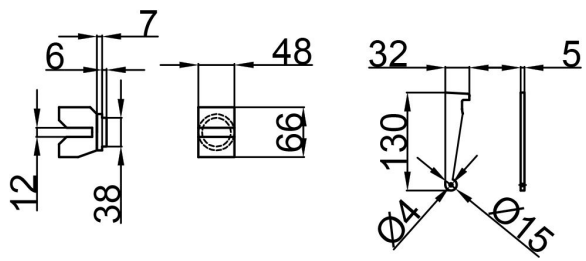

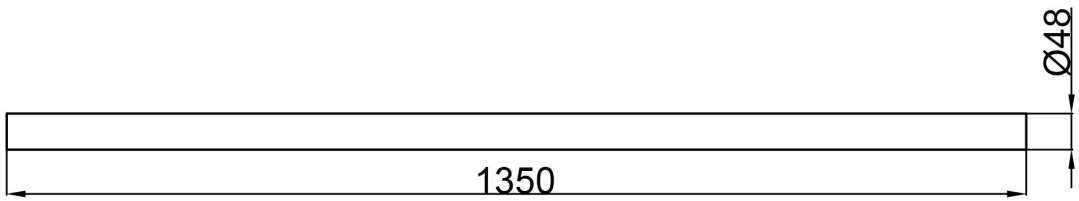

ÜRÜN ADI : KAMALI YATAY BAĞLANTI 150

ÜRÜN KODU : 170604

POZ NO	MALZEME ADI	KESİM ÖLÇÜSÜ	ADET	AĞIRLIK
P1	BORU Ø48*2,5 mm	1350mm	1	0,00kg
P2	KAMA	H:130mm	2	0,00kg
P3	KURT AĞZI DÖKÜM		2	0,00kg

ÖZLER KALIP ve İSKELE

www.ozleriskele.com - proje@ozleriskele.com

ÇİZİM : BURAK UĞURLU

KONTROL : BERKAN ÖZELCİ

TARİH : 03.10.2016

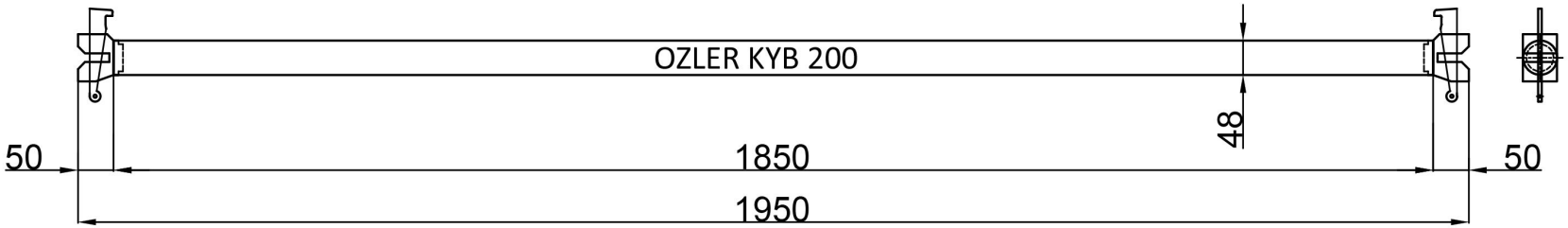

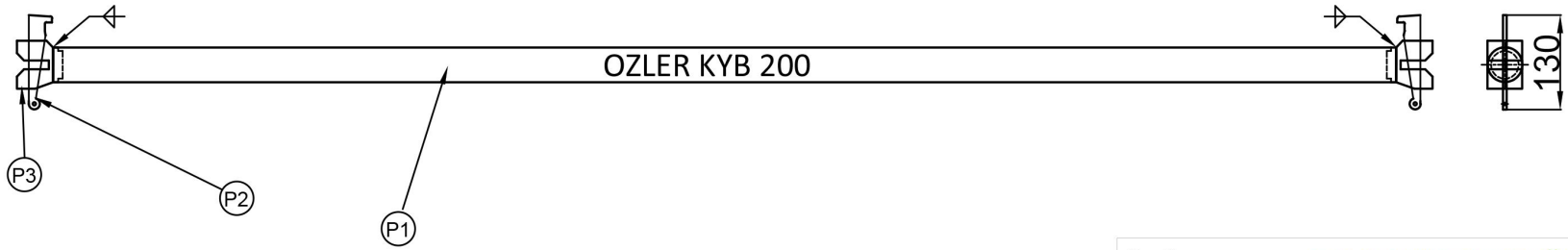

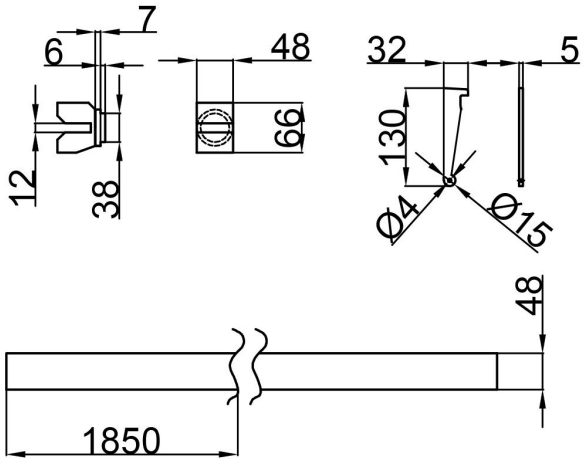

ÜRÜN ADI	: KAMALI YATAY BAĞLANTI 200
ÜRÜN KODU	: 170605

POZ NO	MALZEME ADI	KESİM ÖLÇÜSÜ	ADET	AĞIRLIK
P1	BORU Ø48*2,5 mm	1850mm	1	0,00kg
P2	KAMA	H:130mm	2	0,00kg
P3	KURT AĞZI DÖKÜM		2	0,00kg

ÖZLER
KALIP ve İSKELE

www.ozleriskele.com - proje@ozleriskele.com

ÇİZİM	: BURAK UĞURLU
KONTROL	: BERKAN ÖZELCİ
TARİH	: 03.10.2016

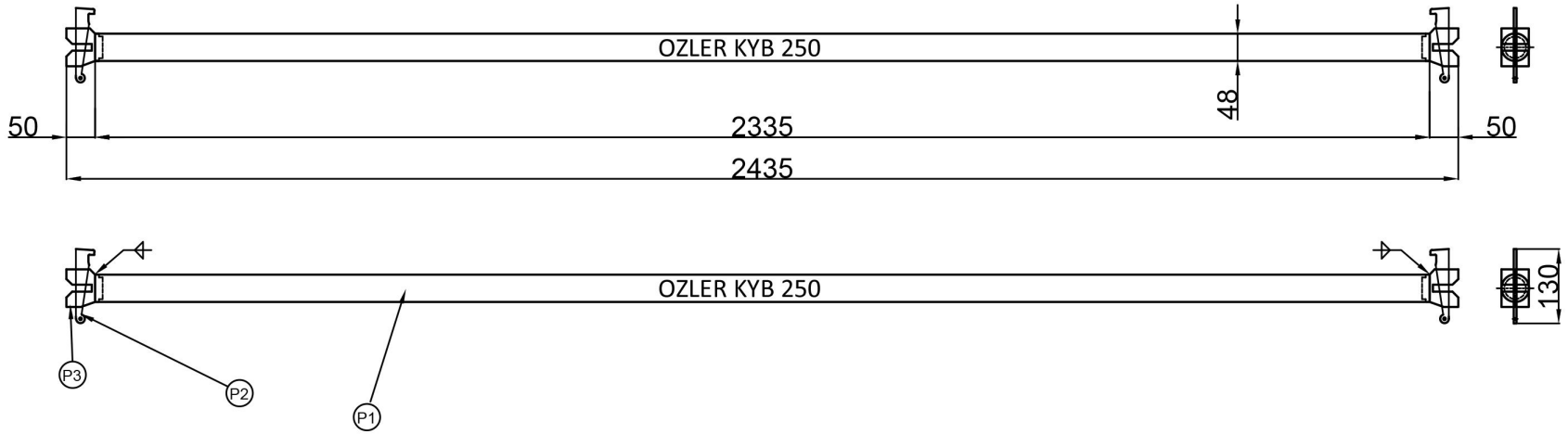

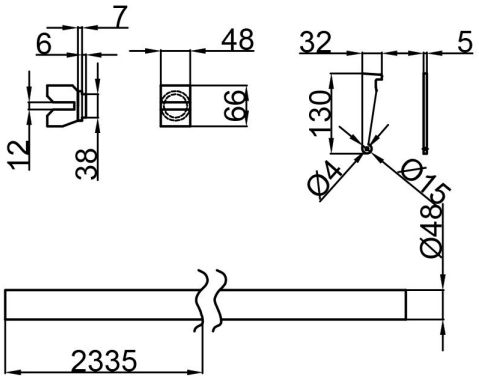

ÜRÜN ADI	: KAMALI YATAY BAĞLANTI 250
ÜRÜN KODU	: 170606

POZ NO	MALZEME ADI	KESİM ÖLÇÜSÜ	ADET	AĞIRLIK
P1	BORU Ø48*2,5 mm	2335mm	1	0,00kg
P2	KAMA	H:130mm	2	0,00kg
P3	KURT AĞZI DÖKÜM		2	0,00kg

ÖZLER KALIP ve İSKELE

www.ozleriskele.com - proje@ozleriskele.com

ÇİZİM	: BURAK UĞURLU
KONTROL	: BERKAN ÖZELCİ
TARİH	: 03.10.2016

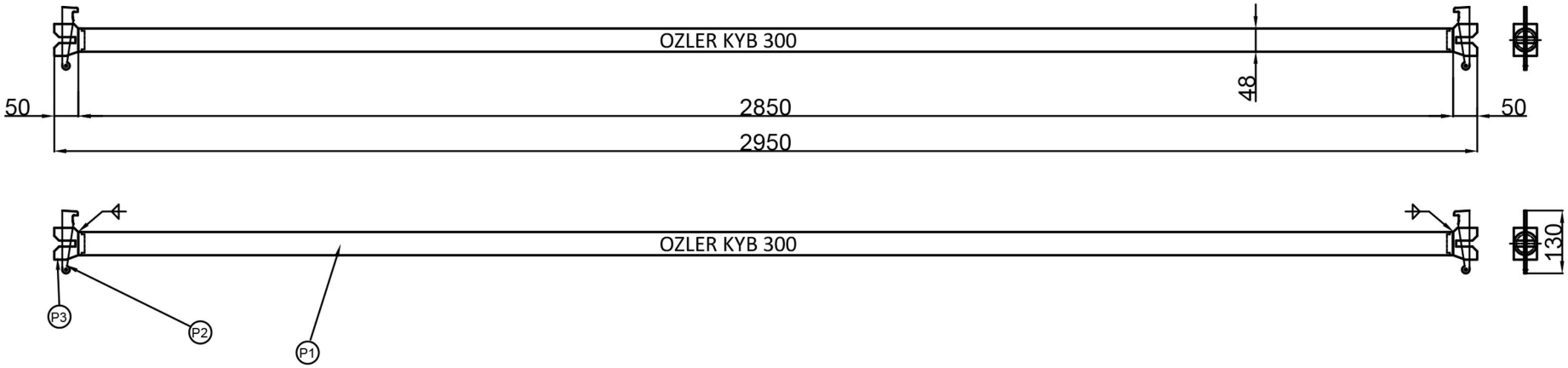

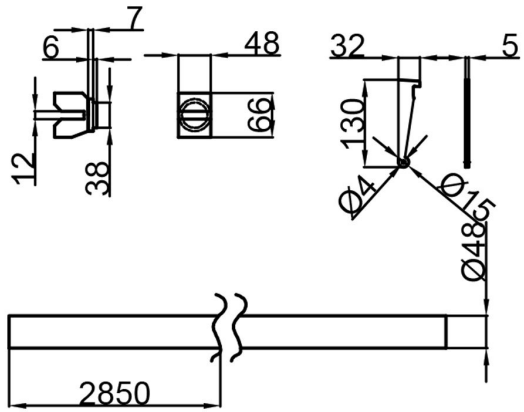

ÜRÜN ADI	: KAMALI YATAY BAĞLANTI 300
ÜRÜN KODU	: 170607

POZ NO	MALZEME ADI	KESİM ÖLÇÜSÜ	ADET	AĞIRLIK
P1	BORU Ø48*2,5 mm	2850mm	1	0,00kg
P2	KAMA	H:130mm	2	0,00kg
P3	KURT AĞZI DÖKÜM		2	0,00kg

ÖZLER KALIP ve İSKELE

www.ozleriskele.com - proje@ozleriskele.com

ÇİZİM	: BURAK UĞURLU
KONTROL	: BERKAN ÖZELCİ
TARİH	: 03.10.2016

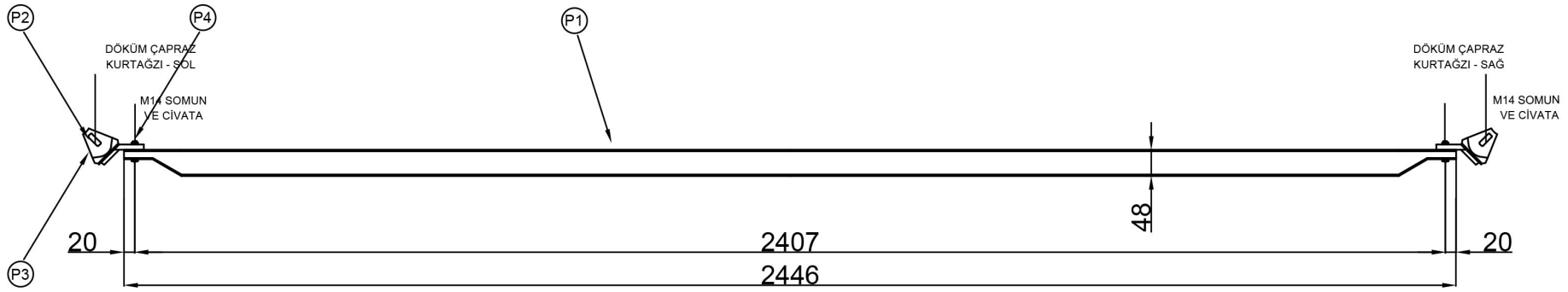

ÜRÜN ADI : KAMALI ÇAPRAZ BAĞLANTI 150

ÜRÜN KODU : 170700

POZ NO	MALZEME ADI	KESİM ÖLÇÜSÜ	ADET	AĞIRLIK
P1	BORU Ø48*2,5 mm	2446mm	1	0,00kg
P2	KAMA	H:130mm	2	0,00kg
P3	KURT AĞZI DÖKÜM	HAZIR MAMÜL	2	0,00kg
P4	CİVATA VE SOMUN14x40	HAZIR MAMÜL	2	0,00kg

ÖZLER
KALIP ve İSKELE

www.ozleriskele.com - proje@ozleriskele.com

ÇİZİM : BURAK UĞURLU

KONTROL : BERKAN ÖZELCİ

TARİH : 03.10.2016

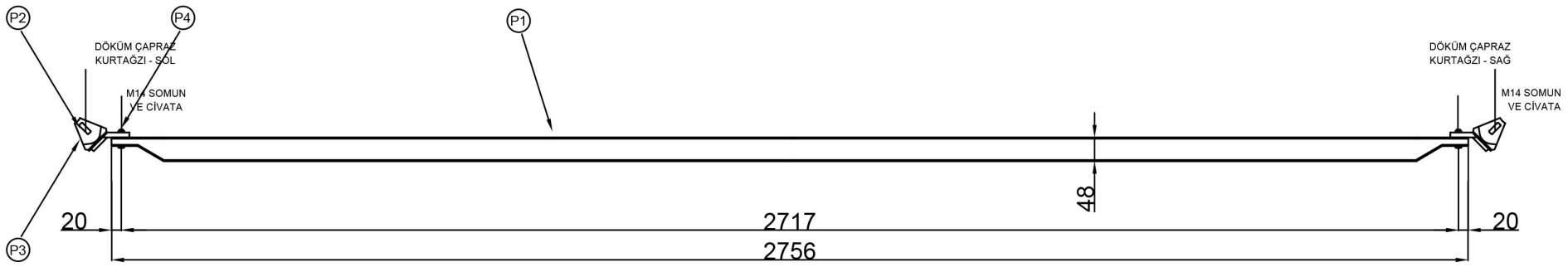

ÜRÜN ADI : KAMALI ÇAPRAZ BAĞLANTI 200

ÜRÜN KODU : 170701

POZ NO	MALZEME ADI	KESİM ÖLÇÜSÜ	ADET	AĞIRLIK
P1	BORU Ø48*2,5 mm	2756mm	1	0,00kg
P2	KAMA	H:130mm	2	0,00kg
P3	KURT AĞZI DÖKÜM	HAZIR MAMÜL	2	0,00kg
P4	CİVATA VE SOMUN14x40	HAZIR MAMÜL	2	0,00kg

ÖZLER
KALIP ve İSKELE

www.ozleriskele.com - proje@ozleriskele.com

ÇİZİM : BURAK UĞURLU

KONTROL : BERKAN ÖZELCİ

TARİH : 03.10.2016

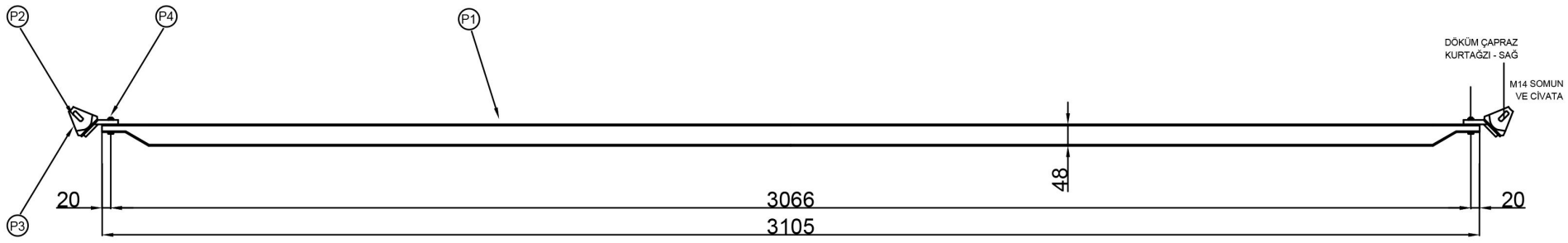

ÜRÜN ADI : KAMALI ÇAPRAZ BAĞLANTI 250

ÜRÜN KODU : 170702

POZ NO	MALZEME ADI	KESİM ÖLÇÜSÜ	ADET	AĞIRLIK
P1	BORU Ø48*2,5 mm	3105mm	1	0,00kg
P2	KAMA	H:130mm	2	0,00kg
P3	KURT AĞZI DÖKÜM	HAZIR MAMÜL	2	0,00kg
P4	CİVATA VE SOMUN14x40	HAZIR MAMÜL	2	0,00kg

ÖZLER
KALIP ve İSKELE
www.ozleriskele.com - proje@ozleriskele.com

ÇİZİM : BURAK UĞURLU

KONTROL : BERKAN ÖZELCİ

TARİH : 03.10.2016

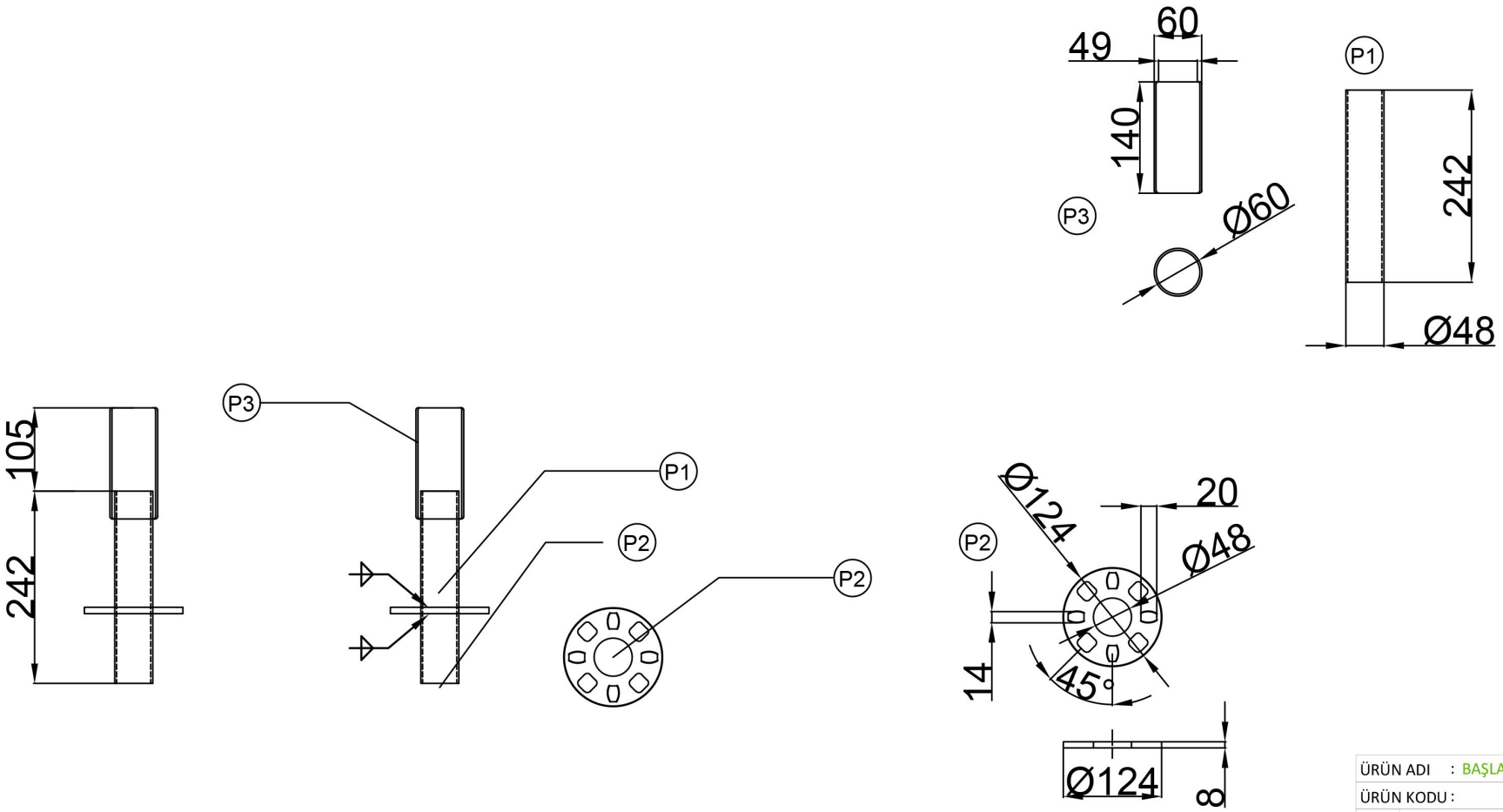

ÜRÜN ADI	: BAŞLANGIÇ AYAĞI
ÜRÜN KODU :	

POZ NO	MALZEME ADI	KESİM ÖLÇÜSÜ	ADET	AĞIRLIK
P1	BORU Ø48*3 mm	242mm	1	0,00kg
P2	8mm Flanş Sacı	Ø124mm	1	0,00kg
P3	BORU Ø60x2,5 mm	140mm	1	0,00kg

ÖZLER
KALIP ve İSKELE
www.ozleriskele.com - proje@ozleriskele.com

ÇİZİM	: BURAK UĞURLU
KONTROL	: BERKAN ÖZELCİ
TARİH	: 03.10.2016

5. MODELDE KULLANILAN KESİTLER VE STATİK ÖZELLİKLERİ

Dikme		
Type	CFCHS48.3X3	
Formcode	3 - Circular hollow section	
Shape type	Thin-walled	
Item material	S 355	
Fabrication	rolled	
Flexural buckling y-y, Flexural buckling z-z	a	a
A [m^2]	4.2700e-04	
A_y [m^2], A_z [m^2]	2.7180e-04	2.7180e-04
A_L [m^2/m], A_D [m^2/m]	1.5200e-01	2.8461e-01
$c_{Y.UCS}$ [mm], $c_{Z.UCS}$ [mm]	24	24
α [deg]	0.00	
I_y [m^4], I_z [m^4]	1.1000e-07	1.1000e-07
i_y [mm], i_z [mm]	16	16
$W_{el.y}$ [m^3], $W_{el.z}$ [m^3]	4.5500e-06	4.5500e-06
$W_{pl.y}$ [m^3], $W_{pl.z}$ [m^3]	6.1700e-06	6.1700e-06
$M_{pl.y.+}$ [Nm], $M_{pl.y.-}$ [Nm]	2.19e+03	2.19e+03
$M_{pl.z.+}$ [Nm], $M_{pl.z.-}$ [Nm]	2.19e+03	2.19e+03
d_y [mm], d_z [mm]	0	0
I_t [m^4], I_w [m^6]	2.2000e-07	1.0353e-43
β_y [mm], β_z [mm]	0	0
Picture	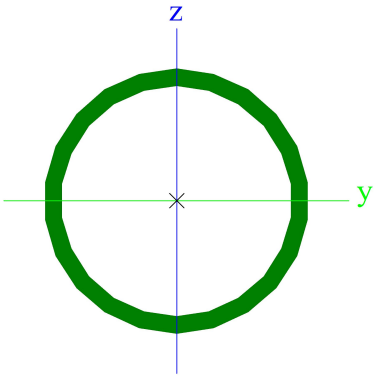	

Yatay		
Type	CFCHS48.3X2.5	
Formcode	3 - Circular hollow section	
Shape type	Thin-walled	
Item material	S 355	
Fabrication	rolled	
Flexural buckling y-y, Flexural buckling z-z	a	a
A [m^2]	3.6000e-04	
A_y [m^2], A_z [m^2]	2.2900e-04	2.2900e-04
A_L [m^2/m], A_D [m^2/m]	1.5200e-01	2.8776e-01
$c_{Y.UCS}$ [mm], $c_{Z.UCS}$ [mm]	24	24
α [deg]	0.00	
I_y [m^4], I_z [m^4]	9.4600e-08	9.4600e-08
i_y [mm], i_z [mm]	16	16
$W_{el.y}$ [m^3], $W_{el.z}$ [m^3]	3.9200e-06	3.9200e-06
$W_{pl.y}$ [m^3], $W_{pl.z}$ [m^3]	5.2500e-06	5.2500e-06
$M_{pl.y.+}$ [Nm], $M_{pl.y.-}$ [Nm]	1.86e+03	1.86e+03
$M_{pl.z.+}$ [Nm], $M_{pl.z.-}$ [Nm]	1.86e+03	1.86e+03
d_y [mm], d_z [mm]	0	0
I_t [m^4], I_w [m^6]	1.8920e-07	6.6451e-44
β_y [mm], β_z [mm]	0	0
Picture	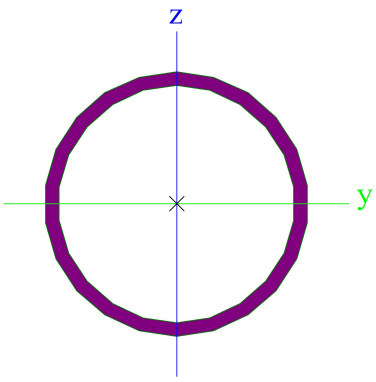	

Topukluk

Type	General cross-section	
Shape type	Thin-walled	
Item material	S 235	
Fabrication	general	
Flexural buckling y-y, Flexural buckling z-z	d	d
A [m^2]	5.1704e-04	
A_y [m^2], A_z [m^2]	2.7492e-04	4.1909e-04
A_L [m^2/m], A_D [m^2/m]	5.2104e-01	5.2104e-01
$c_{Y.UCS}$ [mm], $c_{Z.UCS}$ [mm]	-6	-11
$I_{Y.LCS}$ [m^4], $I_{Z.LCS}$ [m^4]	1.4842e-06	2.0696e-07
$I_{YZ.LCS}$ [m^4]	8.3585e-08	
α [deg]	-3.73	
I_y [m^4], I_z [m^4]	1.4897e-06	2.0152e-07
i_y [mm], i_z [mm]	54	20
$W_{el.y}$ [m^3], $W_{el.z}$ [m^3]	1.4711e-05	5.7497e-06
$W_{pl.y}$ [m^3], $W_{pl.z}$ [m^3]	2.3872e-05	8.7007e-06
$M_{pl.y.+}$ [Nm], $M_{pl.y.-}$ [Nm]	5.61e+03	5.61e+03
$M_{pl.z.+}$ [Nm], $M_{pl.z.-}$ [Nm]	2.04e+03	2.04e+03
d_y [mm], d_z [mm]	28	7
I_t [m^4], I_w [m^6]	6.8939e-10	1.4793e-10
β_y [mm], β_z [mm]	-18	-158
Picture	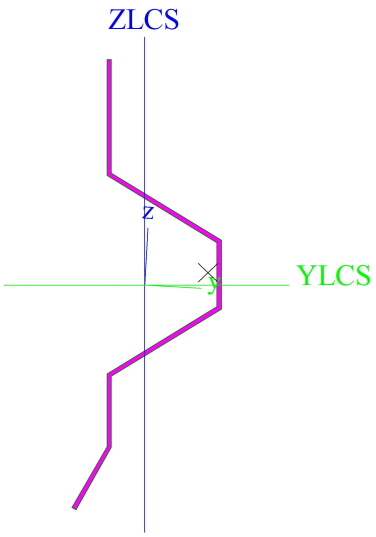	
C.Platform		
Type	General cross-section	
Shape type	Thin-walled	
Item material	S 235	
Fabrication	general	
Flexural buckling y-y, Flexural buckling z-z	d	d
A [m^2]	1.0018e-03	
A_y [m^2], A_z [m^2]	4.9216e-04	2.6351e-04
A_L [m^2/m], A_D [m^2/m]	1.3401e+00	1.3401e+00
$c_{Y.UCS}$ [mm], $c_{Z.UCS}$ [mm]	45	-55
α [deg]	0.00	
I_y [m^4], I_z [m^4]	1.0282e-06	1.5604e-05
i_y [mm], i_z [mm]	32	125
$W_{el.y}$ [m^3], $W_{el.z}$ [m^3]	1.7563e-05	9.7595e-05
$W_{pl.y}$ [m^3], $W_{pl.z}$ [m^3]	2.5531e-05	1.1524e-04
$M_{pl.y.+}$ [Nm], $M_{pl.y.-}$ [Nm]	6.00e+03	6.00e+03
$M_{pl.z.+}$ [Nm], $M_{pl.z.-}$ [Nm]	2.71e+04	2.71e+04
d_y [mm], d_z [mm]	0	65
I_t [m^4], I_w [m^6]	7.0662e-10	2.3317e-08
β_y [mm], β_z [mm]	-311	0
Picture	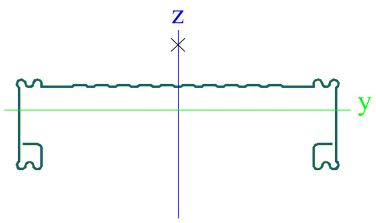	
Çapraz		
Type	CFCHS48.3X2.5	
Formcode	3 - Circular hollow section	
Shape type	Thin-walled	

Item material	S 355	
Fabrication	rolled	
Flexural buckling y-y, Flexural buckling z-z	a	a
A [m^2]	3.6000e-04	
A_y [m^2], A_z [m^2]	2.2900e-04	2.2900e-04
A_L [m^2/m], A_D [m^2/m]	1.5200e-01	2.8776e-01
$c_{Y.UCS}$ [mm], $c_{Z.UCS}$ [mm]	24	24
α [deg]	0.00	
I_y [m^4], I_z [m^4]	9.4600e-08	9.4600e-08
i_y [mm], i_z [mm]	16	16
$W_{el.y}$ [m^3], $W_{el.z}$ [m^3]	3.9200e-06	3.9200e-06
$W_{pl.y}$ [m^3], $W_{pl.z}$ [m^3]	5.2500e-06	5.2500e-06
$M_{pl.y.+}$ [Nm], $M_{pl.y.-}$ [Nm]	1.86e+03	1.86e+03
$M_{pl.z.+}$ [Nm], $M_{pl.z.-}$ [Nm]	1.86e+03	1.86e+03
d_y [mm], d_z [mm]	0	0
I_t [m^4], I_w [m^6]	1.8920e-07	6.6451e-44
β_y [mm], β_z [mm]	0	0
Picture	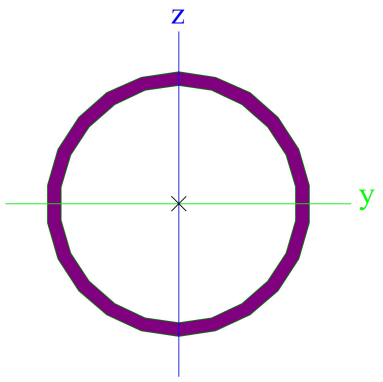	

Explanations of symbols	
Formcode	d - Diameter w - Thickness
A	Area
A_y	Shear Area in principal y-direction
A_z	Shear Area in principal z-direction
A_L	Circumference per unit length
A_D	Drying surface per unit length
$c_{Y.UCS}$	Centroid coordinate in Y-direction of Input axis system
$c_{Z.UCS}$	Centroid coordinate in Z-direction of Input axis system
$I_{Y.LCS}$	Second moment of area about the YLCS axis
$I_{Z.LCS}$	Second moment of area about the ZLCS axis
$I_{YZ.LCS}$	Product moment of area in the LCS system
α	Rotation angle of the principal axis system
I_y	Second moment of area about the principal y-axis
I_z	Second moment of area about the principal z-axis
i_y	Radius of gyration about the principal y-axis

Explanations of symbols	
i_z	Radius of gyration about the principal z-axis
$W_{el.y}$	Elastic section modulus about the principal y-axis
$W_{el.z}$	Elastic section modulus about the principal z-axis
$W_{pl.y}$	Plastic section modulus about the principal y-axis
$W_{pl.z}$	Plastic section modulus about the principal z-axis
$M_{pl.y.+}$	Plastic moment about the principal y-axis for a positive My moment
$M_{pl.y.-}$	Plastic moment about the principal y-axis for a negative My moment
$M_{pl.z.+}$	Plastic moment about the principal z-axis for a positive Mz moment
$M_{pl.z.-}$	Plastic moment about the principal z-axis for a negative Mz moment
d_y	Shear center coordinate in principal y-direction measured from the centroid
d_z	Shear center coordinate in principal z-direction measured from the centroid
I_t	Torsional constant
I_w	Warping constant
β_y	Mono-symmetry constant about the principal y-axis
β_z	Mono-symmetry constant about the principal z-axis

6. MODELDE KULLANILAN MALZEMELERİN MEKANİK ÖZELLİKLERİ

Steel EC3

Name	Unit mass [kg/m^3]	E mod [MPa]	Poisson - nu	Lower limit [mm]	Upper limit [mm]	Fy (range) [MPa]	Fu (range) [MPa]
		G mod [MPa]	Thermal exp [m/mK]				
S 235	7850.0	2.1000e+05	0.3	0	40	235.0	360.0
		8.0769e+04	0.00	40	80	215.0	360.0
S 355	7850.0	2.1000e+05	0.3	0	40	355.0	490.0
		8.0769e+04	0.00	40	80	335.0	470.0

7. Duvar ankrajı ve taban mesnetleri

Name	Node	System	Type	X	Y	Z	Rx	Ry	Rz
Sn1	N598	GCS	Standard	Rigid	Flexible	Free	Free	Free	Free
Sn2	N634	GCS	Standard	Rigid	Flexible	Free	Free	Free	Free
Sn4	N677	GCS	Standard	Rigid	Flexible	Free	Free	Free	Free
Sn6	N679	GCS	Standard	Rigid	Flexible	Free	Free	Free	Free
Sn8	N681	GCS	Standard	Rigid	Flexible	Free	Free	Free	Free
Sn10	N683	GCS	Standard	Rigid	Flexible	Free	Free	Free	Free
Sn66	N1	GCS	Standard	Friction	Friction	Rigid press only	Free	Free	Free
Sn67	N5	GCS	Standard	Friction	Friction	Rigid press only	Free	Free	Free
Sn68	N9	GCS	Standard	Friction	Friction	Rigid press only	Free	Free	Free
Sn69	N13	GCS	Standard	Friction	Friction	Rigid press only	Free	Free	Free
Sn70	N17	GCS	Standard	Friction	Friction	Rigid press only	Free	Free	Free
Sn71	N21	GCS	Standard	Friction	Friction	Rigid press only	Free	Free	Free
Sn72	N25	GCS	Standard	Friction	Friction	Rigid press only	Free	Free	Free
Sn73	N29	GCS	Standard	Friction	Friction	Rigid press only	Free	Free	Free
Sn74	N33	GCS	Standard	Friction	Friction	Rigid press only	Free	Free	Free
Sn75	N37	GCS	Standard	Friction	Friction	Rigid press only	Free	Free	Free
Sn76	N41	GCS	Standard	Friction	Friction	Rigid press only	Free	Free	Free
Sn77	N3	GCS	Standard	Friction	Friction	Rigid press only	Free	Free	Free
Sn78	N7	GCS	Standard	Friction	Friction	Rigid press only	Free	Free	Free
Sn79	N11	GCS	Standard	Friction	Friction	Rigid press only	Free	Free	Free
Sn80	N15	GCS	Standard	Friction	Friction	Rigid press only	Free	Free	Free
Sn81	N19	GCS	Standard	Friction	Friction	Rigid press only	Free	Free	Free
Sn82	N23	GCS	Standard	Friction	Friction	Rigid press only	Free	Free	Free
Sn83	N27	GCS	Standard	Friction	Friction	Rigid press only	Free	Free	Free
Sn84	N31	GCS	Standard	Friction	Friction	Rigid press only	Free	Free	Free
Sn85	N35	GCS	Standard	Friction	Friction	Rigid press only	Free	Free	Free
Sn86	N39	GCS	Standard	Friction	Friction	Rigid press only	Free	Free	Free
Sn87	N43	GCS	Standard	Friction	Friction	Rigid press only	Free	Free	Free
Sn88	N604	GCS	Standard	Rigid	Flexible	Free	Free	Free	Free
Sn89	N610	GCS	Standard	Rigid	Flexible	Free	Free	Free	Free
Sn90	N616	GCS	Standard	Rigid	Flexible	Free	Free	Free	Free
Sn91	N622	GCS	Standard	Rigid	Flexible	Free	Free	Free	Free
Sn92	N628	GCS	Standard	Rigid	Flexible	Free	Free	Free	Free
Sn94	N640	GCS	Standard	Rigid	Flexible	Free	Free	Free	Free
Sn95	N646	GCS	Standard	Rigid	Flexible	Free	Free	Free	Free
Sn96	N652	GCS	Standard	Rigid	Flexible	Free	Free	Free	Free
Sn97	N658	GCS	Standard	Rigid	Flexible	Free	Free	Free	Free
Sn98	N664	GCS	Standard	Rigid	Flexible	Free	Free	Free	Free
Sn109	N695	GCS	Standard	Rigid	Flexible	Free	Free	Free	Free
Sn111	N697	GCS	Standard	Rigid	Flexible	Free	Free	Free	Free
Sn113	N699	GCS	Standard	Rigid	Flexible	Free	Free	Free	Free
Sn115	N701	GCS	Standard	Rigid	Flexible	Free	Free	Free	Free
Sn118	N713	GCS	Standard	Rigid	Flexible	Free	Free	Free	Free
Sn120	N715	GCS	Standard	Rigid	Flexible	Free	Free	Free	Free
Sn122	N717	GCS	Standard	Rigid	Flexible	Free	Free	Free	Free
Sn124	N719	GCS	Standard	Rigid	Flexible	Free	Free	Free	Free
Sn127	N731	GCS	Standard	Rigid	Flexible	Free	Free	Free	Free
Sn129	N733	GCS	Standard	Rigid	Flexible	Free	Free	Free	Free
Sn131	N735	GCS	Standard	Rigid	Flexible	Free	Free	Free	Free
Sn133	N737	GCS	Standard	Rigid	Flexible	Free	Free	Free	Free
Sn136	N749	GCS	Standard	Rigid	Flexible	Free	Free	Free	Free
Sn138	N751	GCS	Standard	Rigid	Flexible	Free	Free	Free	Free
Sn140	N753	GCS	Standard	Rigid	Flexible	Free	Free	Free	Free
Sn142	N755	GCS	Standard	Rigid	Flexible	Free	Free	Free	Free
Sn145	N767	GCS	Standard	Rigid	Flexible	Free	Free	Free	Free
Sn147	N769	GCS	Standard	Rigid	Flexible	Free	Free	Free	Free
Sn149	N771	GCS	Standard	Rigid	Flexible	Free	Free	Free	Free
Sn151	N773	GCS	Standard	Rigid	Flexible	Free	Free	Free	Free
Sn161	N685	GCS	Standard	Rigid	Flexible	Free	Free	Free	Free
Sn163	N687	GCS	Standard	Rigid	Flexible	Free	Free	Free	Free
Sn165	N689	GCS	Standard	Rigid	Flexible	Free	Free	Free	Free
Sn167	N691	GCS	Standard	Rigid	Flexible	Free	Free	Free	Free
Sn169	N693	GCS	Standard	Rigid	Flexible	Free	Free	Free	Free
Sn170	N703	GCS	Standard	Rigid	Flexible	Free	Free	Free	Free
Sn172	N705	GCS	Standard	Rigid	Flexible	Free	Free	Free	Free
Sn174	N707	GCS	Standard	Rigid	Flexible	Free	Free	Free	Free
Sn176	N709	GCS	Standard	Rigid	Flexible	Free	Free	Free	Free
Sn178	N711	GCS	Standard	Rigid	Flexible	Free	Free	Free	Free
Sn179	N721	GCS	Standard	Rigid	Flexible	Free	Free	Free	Free
Sn181	N723	GCS	Standard	Rigid	Flexible	Free	Free	Free	Free
Sn183	N725	GCS	Standard	Rigid	Flexible	Free	Free	Free	Free
Sn185	N727	GCS	Standard	Rigid	Flexible	Free	Free	Free	Free
Sn187	N729	GCS	Standard	Rigid	Flexible	Free	Free	Free	Free
Sn188	N739	GCS	Standard	Rigid	Flexible	Free	Free	Free	Free
Sn190	N741	GCS	Standard	Rigid	Flexible	Free	Free	Free	Free
Sn192	N743	GCS	Standard	Rigid	Flexible	Free	Free	Free	Free

Name	Node	System	Type	X	Y	Z	Rx	Ry	Rz
Sn194	N745	GCS	Standard	Rigid	Flexible	Free	Free	Free	Free
Sn196	N747	GCS	Standard	Rigid	Flexible	Free	Free	Free	Free
Sn199	N757	GCS	Standard	Rigid	Flexible	Free	Free	Free	Free
Sn201	N759	GCS	Standard	Rigid	Flexible	Free	Free	Free	Free
Sn203	N761	GCS	Standard	Rigid	Flexible	Free	Free	Free	Free
Sn205	N763	GCS	Standard	Rigid	Flexible	Free	Free	Free	Free
Sn207	N765	GCS	Standard	Rigid	Flexible	Free	Free	Free	Free

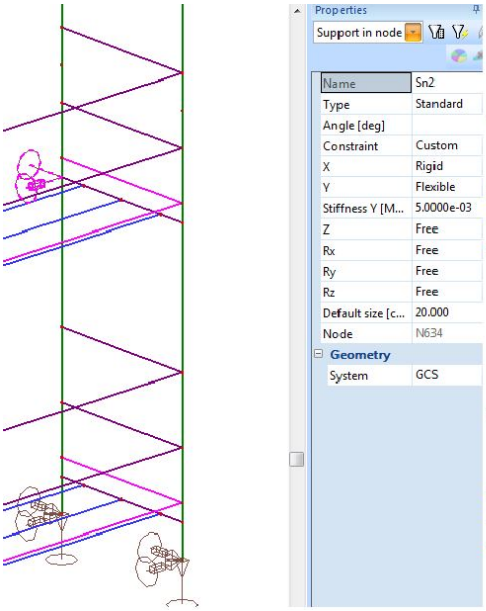

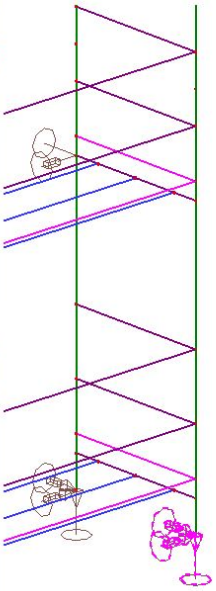

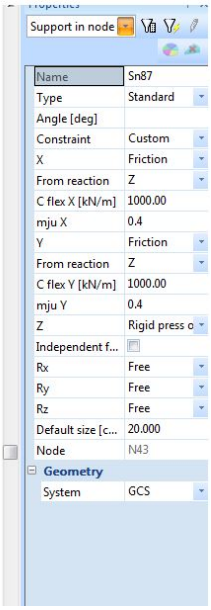

8. Dikme, yatay eleman ve çaprazların birleşim şekline ait değerler

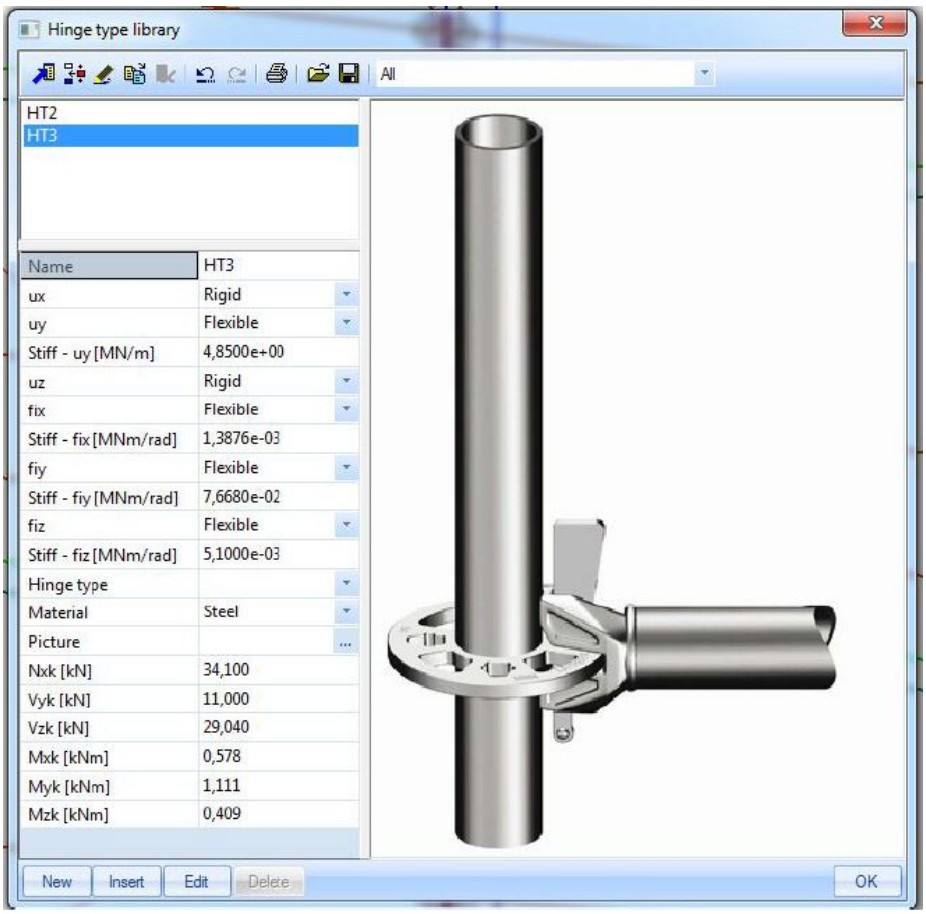

İSKELE PARAMETRELERİ:

KONUMA BAĞLI RÜZGAR ETKİ KATSAYISI	Cs : 1	EN12810 - 1 Madde 8.3 çizelge 6
AERODİNAMİK KUVVET KATSAYISI	Cf : 1,3	EN12810-1 Madde 8.3 çizelge 5

İSKELE BİLEŞENLERİNE AİT REFERANS ALANLAR
Dikme elemanları için : 0.048 m
Yatay elemanlar için : 0.048 m
Diagonel (çapraz) elemanlar için : 0.048 m
Platform elemanı için : 0.4 m

ÇALIŞMA RÜZGAR BASINCI	q : 0.2 kn/m²	EN 12811-1 Madde 6.2.7.4.2

9. YÜK DURUMLARI

9.1. Ölü Yükler

İskele elemanlarının kendi ağırlıkları Scia Engineer programı tarafından tanımlanan kesitlere göre kendiliğinden hesaplara dahil edilir. Bu yükler kombinasyonlara 1.5 katı ile dahil edilmiştir.

9.2. Servis Yükleri

TS EN 12811-1 madde 6.2.2 Çizelge-3' e göre düzgün yayılı hareketli yük değerleri alınmıştır. Yük 4 sınıfı için bu değer 300 kg/m² olarak hesaba dahil edilmiştir. Bu yük iskele çalışma katlarına uygulanmıştır. İskele çalışma katları en olumsuz durumu oluşturması açısından 10. 11. ve 12. katlar olarak seçilmiştir. Yükleme 10. ve 12. katlara yarım, 11. kata tam olarak yapılmıştır. Bu yükler kombinasyonlara 1.5 katı ile dahil edilmiştir.
Scia Engineer programında hareketli yükler aşağıda gösterildiği şekilde kalas elemanları üzerine yayılı yük olarak tanımlanmıştır.

9.3. Rüzgar Yükleri

EN 12810-1 madde 8.3 şekil 3
İskele rüzgar hesap yükleri ;
Maximum rüzgar yükü değeri için aşağıdaki diagram kullanılmıştır.

Name	WP1
Input	user
Height / Pressure	0.000000 / 800.000000
	24.000000 / 1100.000000
	25.500000 / 1120.000000
	100.000000 / 1120.000000

Drawing

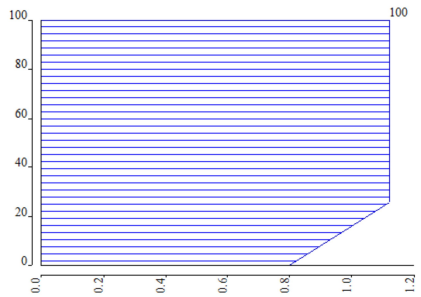

10. YÜK KOMBİNASYONLARI VE KOMBİNASYON FAKTÖRLERİ

Name	Description	Type	Load cases	Coeff. [-]
CO1	Servis Durumu	Linear - ultimate	SW - Zati	1.50
			S - Servis Yükü	1.50
			Wx_Çalışma - Rüzgar Yükü	1.50
CO2	Servis Durumu	Linear - ultimate	SW - Zati	1.50
			S - Servis Yükü	1.50
			Wy_Çalışma - Rüzgar Yükü	1.50
CO3	Servis Dışı	Linear - ultimate	SW - Zati	1.50
			S1 - Servis Yükü %50	1.50
			Wx_Max - Rüzgar Yükü	1.50
CO4	Servis Dışı	Linear - ultimate	SW - Zati	1.50
			S1 - Servis Yükü %50	1.50
			Wy_Max - Rüzgar Yükü	1.50
CO5	Servis Durumu	Linear - serviceability	SW - Zati	1.00
			S - Servis Yükü	1.00
			Wx_Çalışma - Rüzgar Yükü	1.00
CO6	Servis Durumu	Linear - serviceability	SW - Zati	1.00
			S - Servis Yükü	1.00
			Wy_Çalışma - Rüzgar Yükü	1.00
CO7	Servis Dışı	Linear - serviceability	SW - Zati	1.00
			S1 - Servis Yükü %50	1.00
			Wx_Max - Rüzgar Yükü	1.00
CO8	Servis Dışı	Linear - serviceability	SW - Zati	1.00
			S1 - Servis Yükü %50	1.00
			Wy_Max - Rüzgar Yükü	1.00

11. Nonlinear Kombinasyonlar

Name	Type	Load cases	Coeff. [-]
NC1	Ultimate	SW - Zati	1.50
		S - Servis Yükü	1.50
		Wx_Çalışma - Rüzgar Yükü	1.50
NC2	Ultimate	SW - Zati	1.50
		S - Servis Yükü	1.50
		Wy_Çalışma - Rüzgar Yükü	1.50
NC3	Ultimate	SW - Zati	1.50
		S1 - Servis Yükü %50	1.50
		Wx_Max - Rüzgar Yükü	1.50
NC4	Ultimate	SW - Zati	1.50
		S1 - Servis Yükü %50	1.50
		Wy_Max - Rüzgar Yükü	1.50
NC5	Serviceability	SW - Zati	1.00
		S - Servis Yükü	1.00
		Wx_Çalışma - Rüzgar Yükü	1.00
NC6	Serviceability	SW - Zati	1.00
		S - Servis Yükü	1.00
		Wy_Çalışma - Rüzgar Yükü	1.00
NC7	Serviceability	SW - Zati	1.00
		S1 - Servis Yükü %50	1.00
		Wx_Max - Rüzgar Yükü	1.00
NC8	Serviceability	SW - Zati	1.00
		S1 - Servis Yükü %50	1.00
		Wy_Max - Rüzgar Yükü	1.00

12. Result classes

Name	List
All ULS	CO1 - Linear - ultimate
	CO2 - Linear - ultimate
	CO3 - Linear - ultimate
	CO4 - Linear - ultimate
All SLS	CO5 - Linear - serviceability
	CO6 - Linear - serviceability
	CO7 - Linear - serviceability
	CO8 - Linear - serviceability
NC ULS	NC1
	NC2
	NC3
	NC4
NC SLS	NC5
	NC6
	NC7
	NC8

13. Stabilite Kombinasyonları

Name	Load cases	Coeff. [-]
S1	SW - Zati	1.50
	S - Servis Yükü	1.50
	Wx_Çalışma - Rüzgar Yükü	1.50
S2	SW - Zati	1.50
	S - Servis Yükü	1.50
	Wy_Çalışma - Rüzgar Yükü	1.50
S3	SW - Zati	1.50
	S1 - Servis Yükü %50	1.50
	Wx_Max - Rüzgar Yükü	1.50
S4	SW - Zati	1.50
	S1 - Servis Yükü %50	1.50
	Wy_Max - Rüzgar Yükü	1.50
S1/1 - 5.27		
S2/1 - 5.01		
S3/1 - 8.28		
S4/1 - 5.46		

14. Sistem Tasarımı

İskele sistemi oluşturulan kombinasyonlar altında lineer analizler ile kontrol edilmiştir. Stabilite analizleri yapılarak ikinci mertebe analizine gerek olduğu görülmüş ve nonlineer analizler yapılarak ikinci mertebe analizleri ve yapı kusuru da (sistemin global kusurları ve elemanlar için bombe kusurları) dikkate alınmıştır. (Madde 13 S2/1 5,01< 10 ikinci mertebe analizi gerekli)

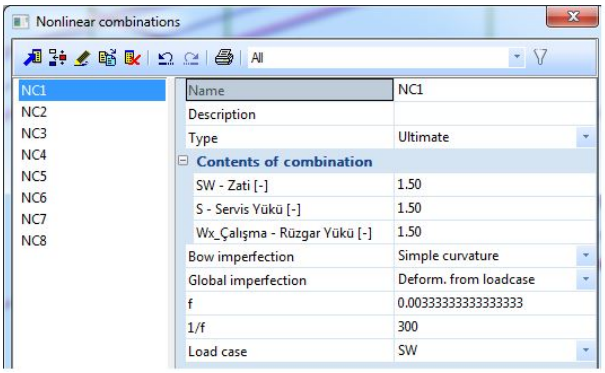

15. YÜK ANALİZİ

15.1. Servis yükü durumu (S) (S1)

Servis yüklerinin elemanlara dağılımı aşağıdaki diyagramda gösterilmiştir.

Servis Durumu
Fs = Ay1*3 kN/m2 = 0,32 * 3 kN/m2 = 0,96 / 2 = 0,48 kN/m (Düzgün yayılı yük) En üst kat ve 2 altındaki kat
Fs = Ay1*3 kN/m2 = 0,32 * 3 kN/m2 = 0,96 kN/m (Düzgün yayılı yük) En üst katın altındaki kat
Servis Dışı Durum
Fs =Ay1*0,50*3 kN/m2 = 0,32*0,5*3 kN/m2=0,48 kN/m (Düzgün yayılı yük) En üst katın altındaki kat

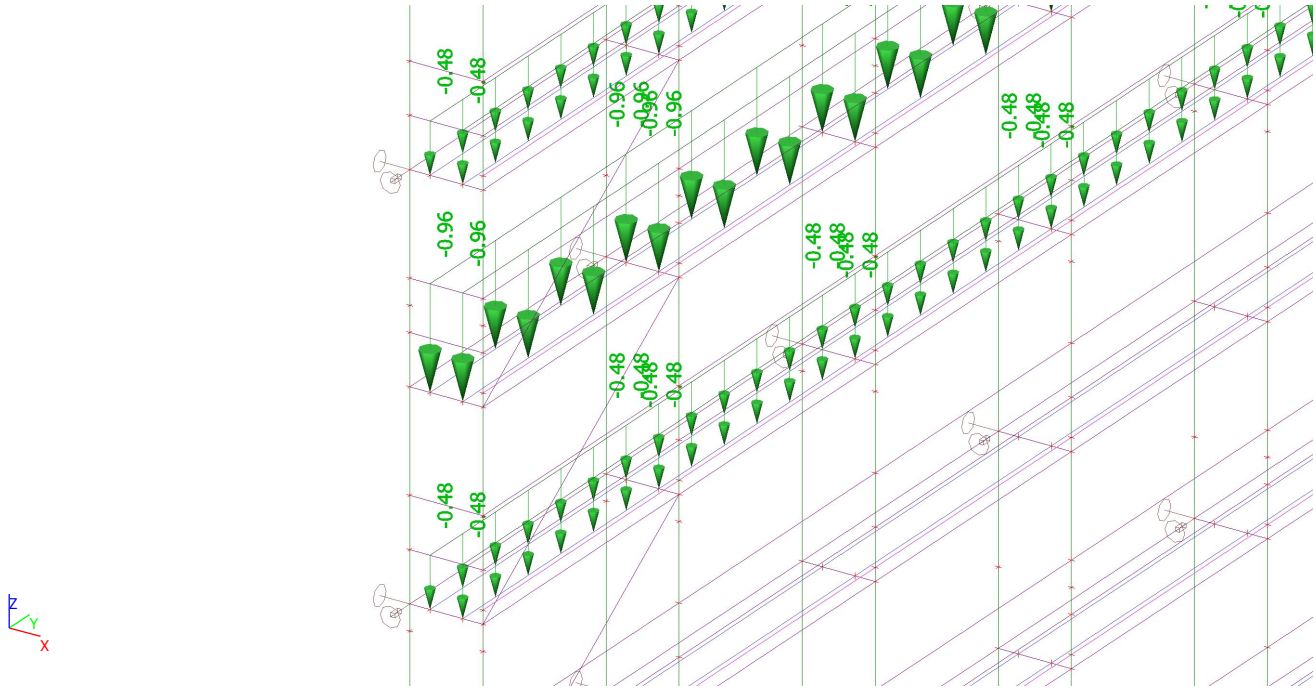

15.2. Rüzgar Yükleri

TS 12810-1, Madde 8.3' te verilen katsayılar ve Şekil 3' te verilen basınç değerlerine göre rüzgar hesaplamaları yapılmıştır.

Rüzgar yükü dağılımları aşağıdaki diyagramda gösterilmiştir.
Çalışma rüzgar yükü durumu hesap değerleri

F = 1 * 1,3 * 0,048 * 0,2 = 0,01248 kN/m Dikme elemanı için
F = 1 * 1,3 * 0,048 * 0,2 = 0,01248 kN/m Yatay eleman için
F = 1 * 1,3 * 0,048 * 0,2 = 0,01248 kN/m Çapraz elemanı için
F = 1 * 1,3 * 0,4 * 0,2 = 0,104 kN/m Tekmelik elemanı için

Maximum rüzgar
Diagrama girilmiş değerler otomatik olarak hesaplanıp elemanlar üzerine etkitilmiştir.

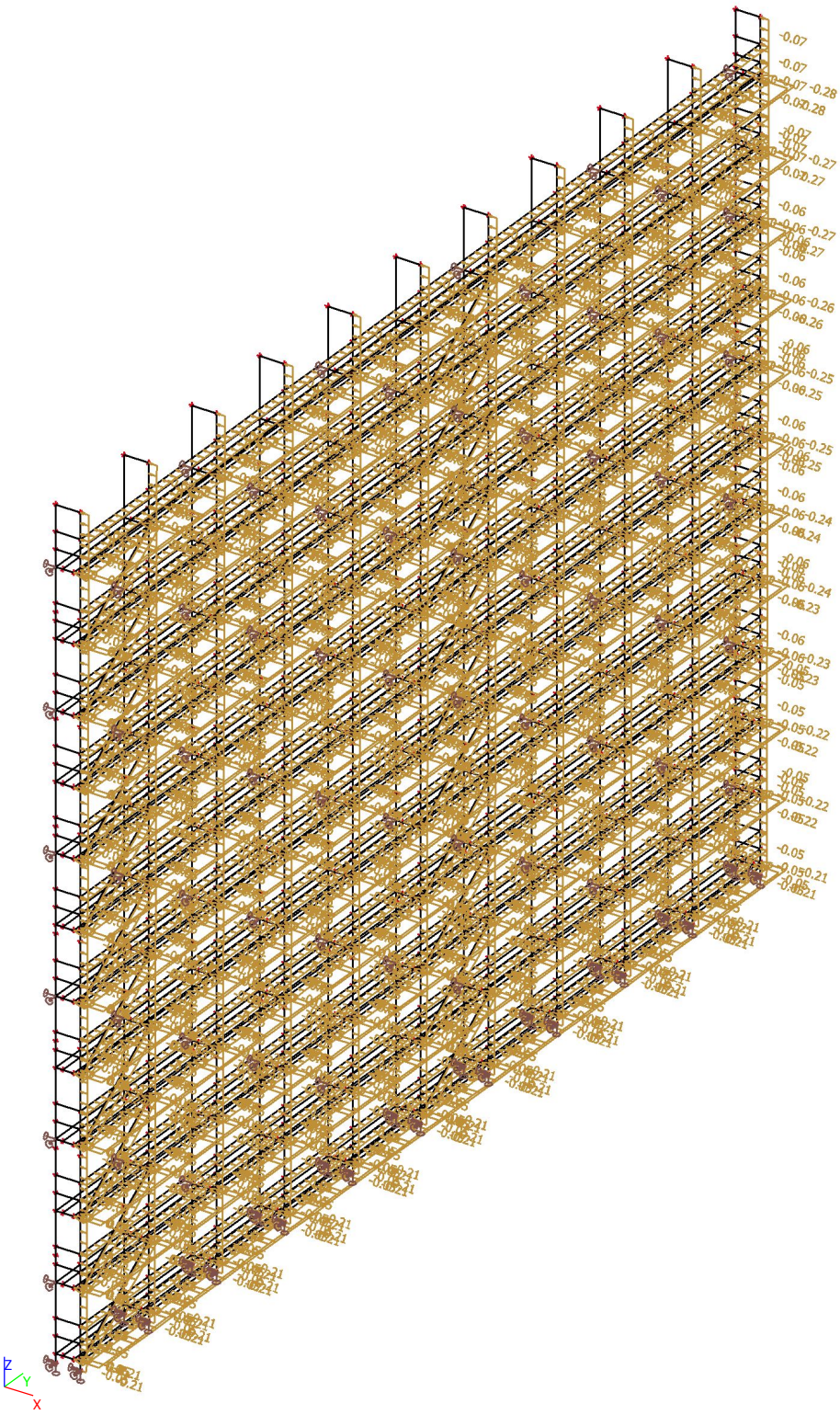

Şekil 7.2: Genel Sistemde Max Rüzgar Yükleri Yüklemesi (kN/m)

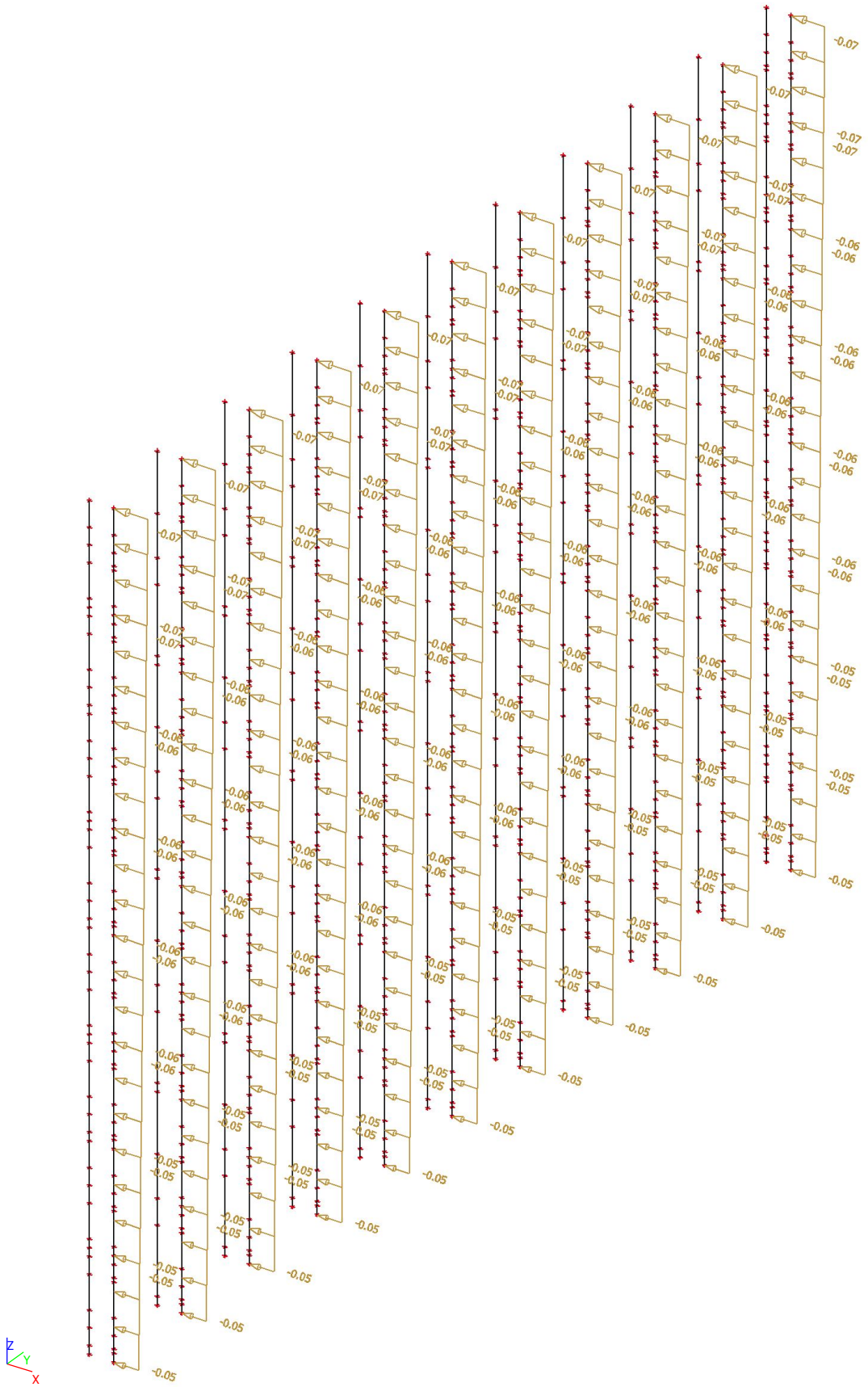

Şekil 7.3: Dikmelere gelen maximum rüzgar yükleri (kN/m)

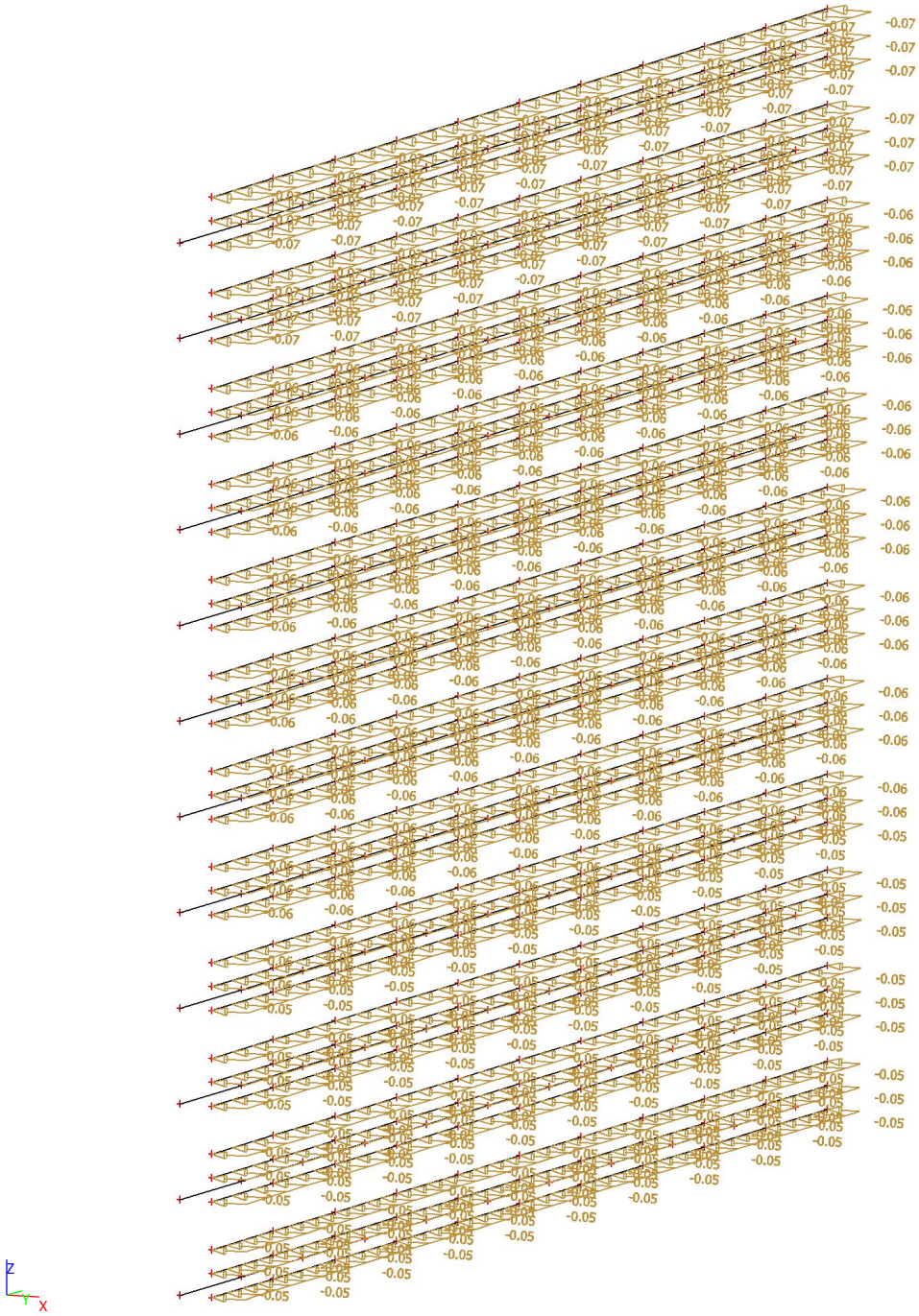

Şekil 7.4: Korkuluklara gelen maximum rüzgar yükü (kN/m)

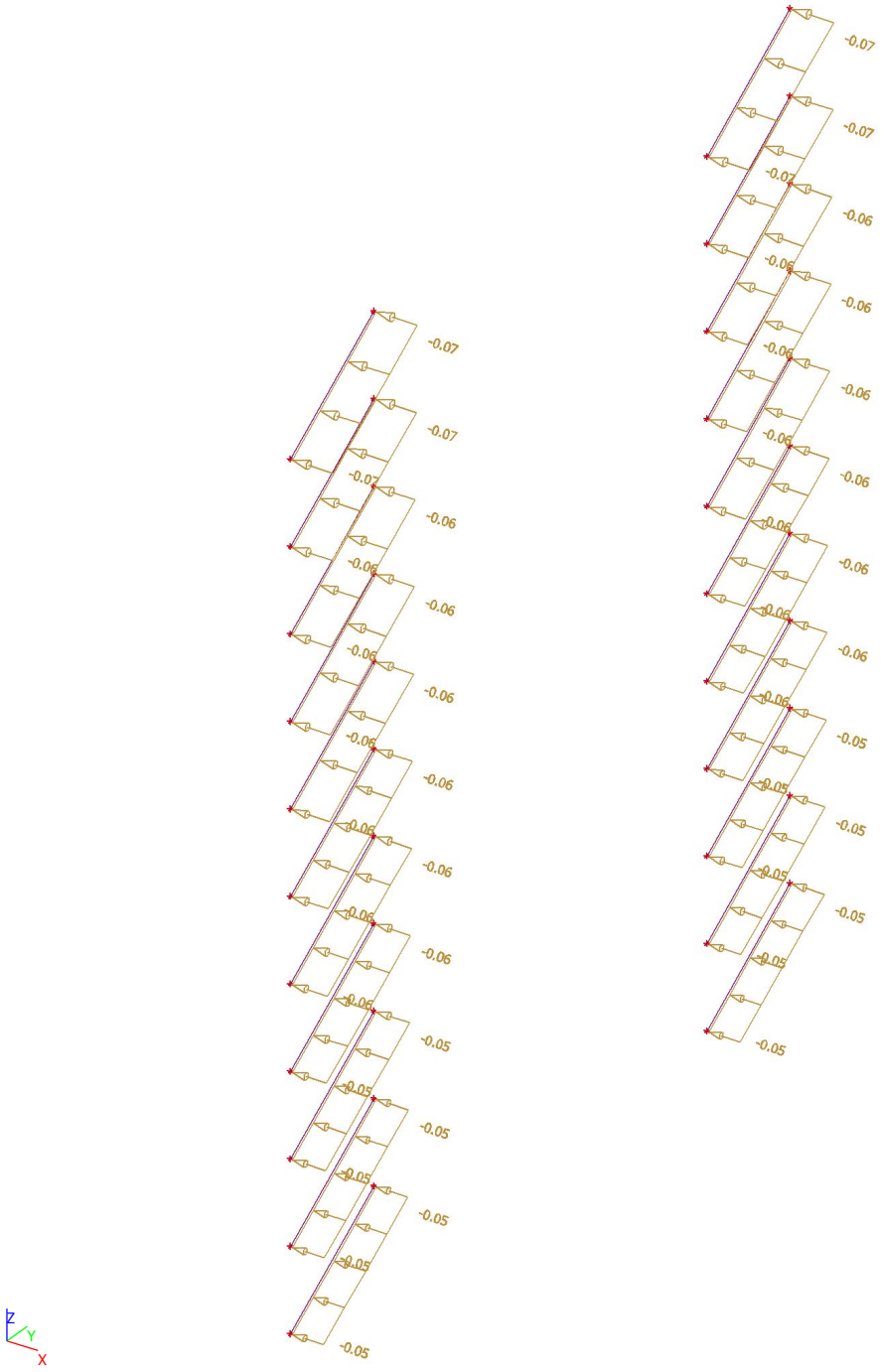

Şekil 7.5: Çaprazlara gelen maximum rüzgar yükü (kN/m)

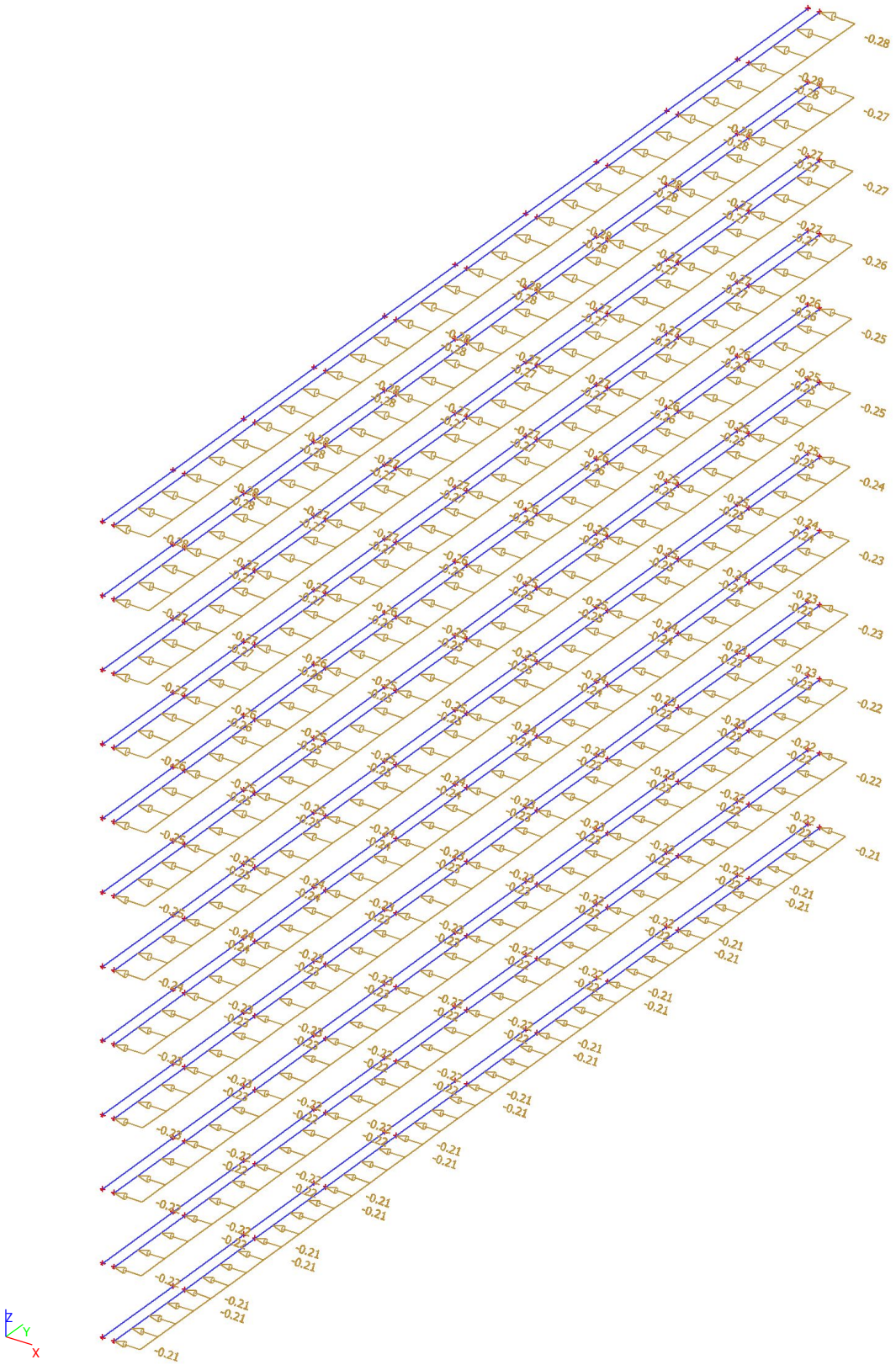

Şekil 7.6: Çelik platformlara gelen maximum rüzgar yükü (kN/m)

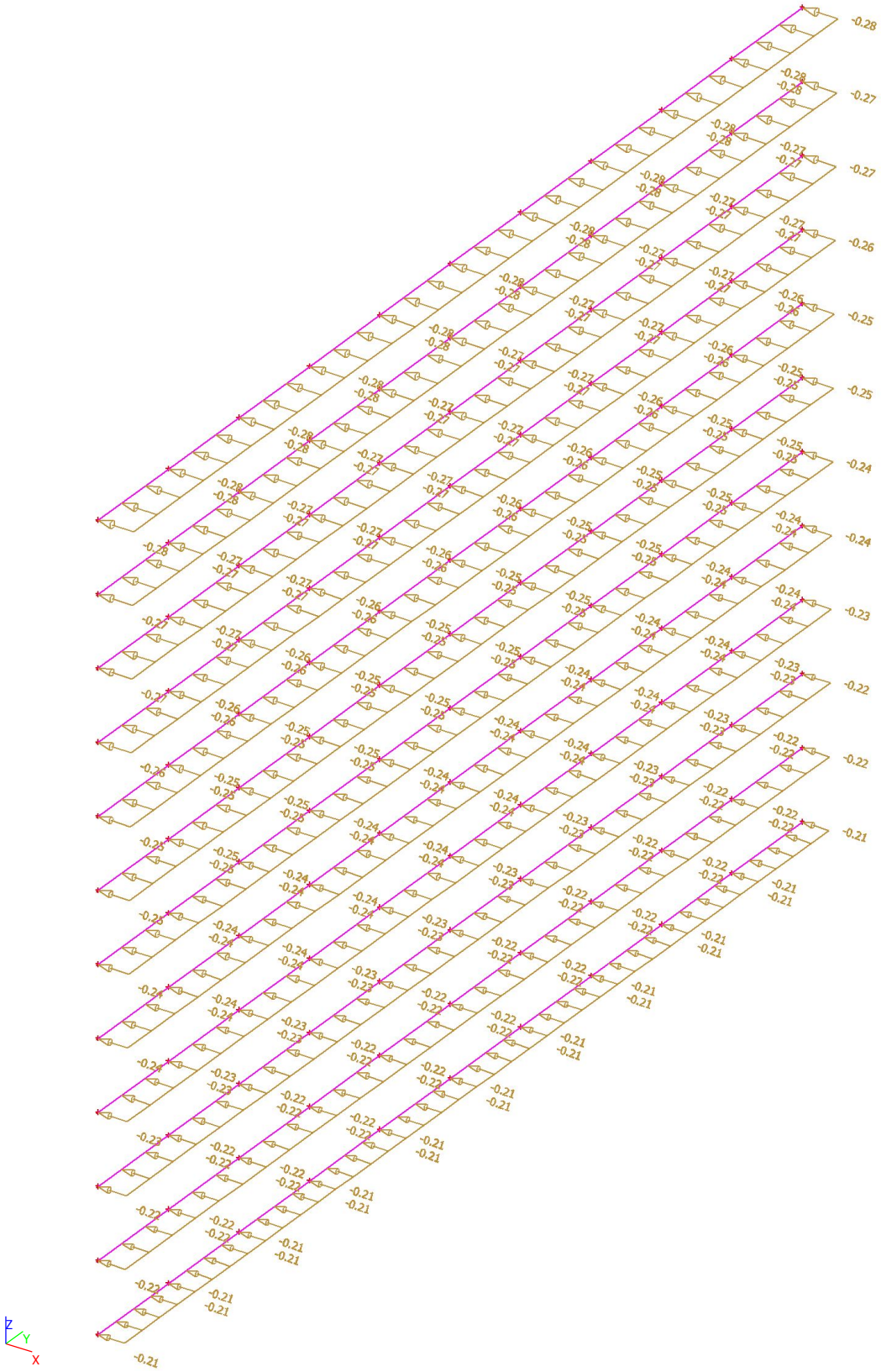

Şekil 7.7: Topukluklara gelen maximum rüzgar yükü (kN/m)

16. Rüzgar kuvvetinden dolayı duvar ankrajlarına gelen en büyük kuvvet

Linear calculation, Extreme : Global
Selection : Sn145
Load cases : Wx_Max

Support	Case	Rx [kN]	Ry [kN]	Rz [kN]	Mx [kNm]	My [kNm]	Mz [kNm]
Sn145/N767	Wx_Max	**6.12**	**0.00**	**0.00**	**0.00**	**0.00**	**0.00**

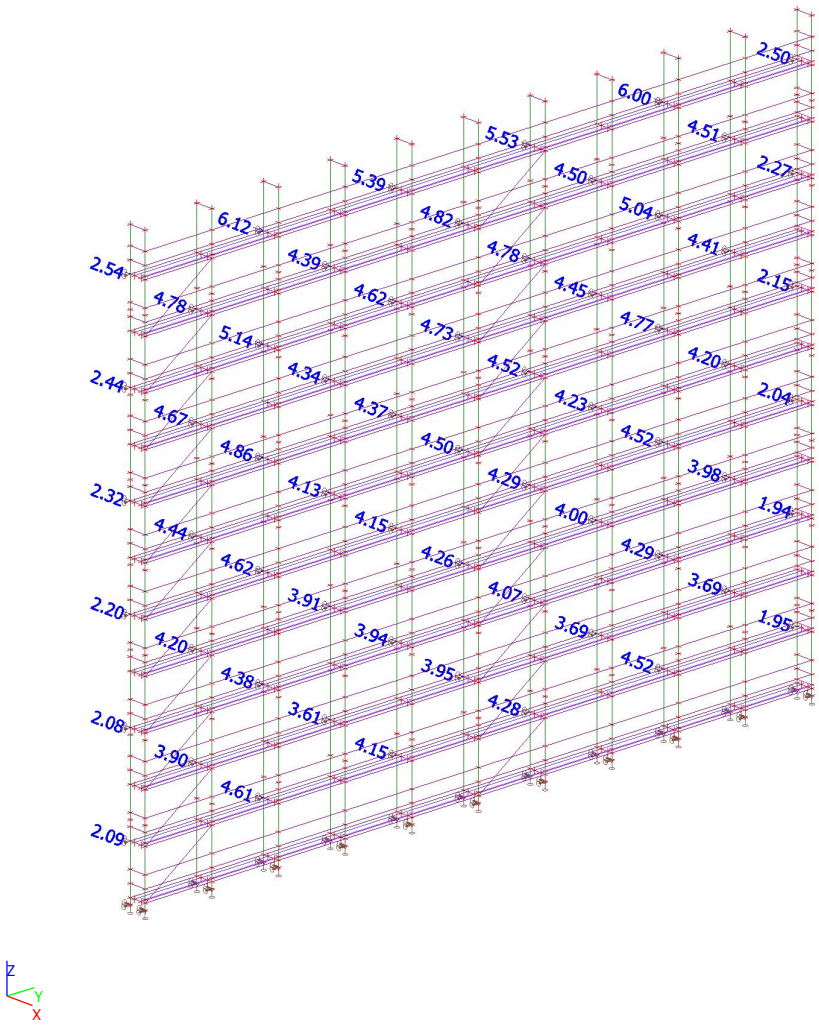

17. Taban mesnetlerine gelen kuvvetler

Nonlinear calculation, Extreme : Global
Selection : Sn83
Class : NC ULS

Support	Case	Rx [kN]	Ry [kN]	Rz [kN]	Mx [kNm]	My [kNm]	Mz [kNm]
Sn83/N27	NC4	**-0.18**	**-0.26**	22.25	0.00	0.00	0.00
Sn83/N27	NC3	**0.84**	**0.00**	**13.73**	0.00	0.00	0.00
Sn83/N27	NC2	-0.10	-0.06	**22.60**	0.00	0.00	0.00
Sn83/N27	NC1	0.14	-0.02	20.83	**0.00**	**0.00**	**0.00**

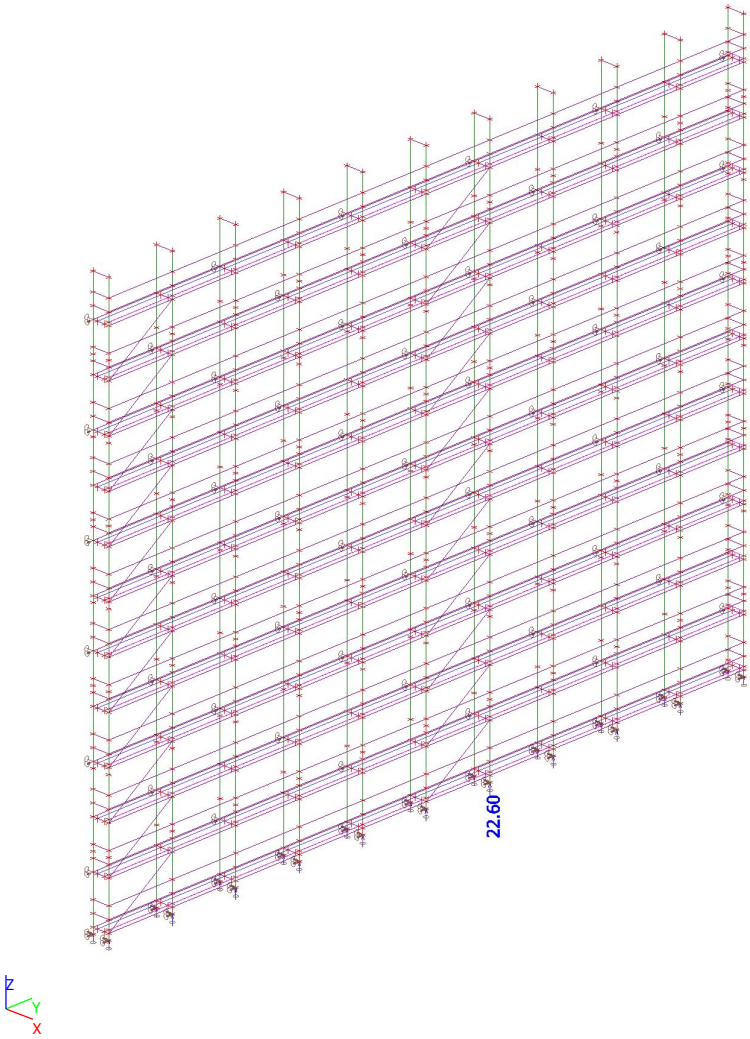

18. ELEMANLARIN ÜZERİNDEKİ YÜKLER

Name	Member	Type	Dir	Value - P_1 [kN/m]	Pos x_1	Coor	Orig	Ecc ey [cm]
	Load case	System	Distribution	Value - P_2 [kN/m]	Pos x_2	Loc		Ecc ez [cm]
LF1	C.Platform299	Force	Z	-0.96	0.000	Rela	From start	0.000
	S - Servis Yükü	GCS	Uniform		1.000	Length		0.000
LF4	C.Platform302	Force	Z	-0.96	0.000	Rela	From start	0.000
	S - Servis Yükü	GCS	Uniform		1.000	Length		0.000
LF7	C.Platform305	Force	Z	-0.96	0.000	Rela	From start	0.000
	S - Servis Yükü	GCS	Uniform		1.000	Length		0.000
LF10	C.Platform308	Force	Z	-0.96	0.000	Rela	From start	0.000
	S - Servis Yükü	GCS	Uniform		1.000	Length		0.000
LF13	C.Platform311	Force	Z	-0.96	0.000	Rela	From start	0.000
	S - Servis Yükü	GCS	Uniform		1.000	Length		0.000
LF16	C.Platform314	Force	Z	-0.96	0.000	Rela	From start	0.000
	S - Servis Yükü	GCS	Uniform		1.000	Length		0.000
LF19	C.Platform317	Force	Z	-0.96	0.000	Rela	From start	0.000
	S - Servis Yükü	GCS	Uniform		1.000	Length		0.000
LF22	C.Platform320	Force	Z	-0.96	0.000	Rela	From start	0.000
	S - Servis Yükü	GCS	Uniform		1.000	Length		0.000
LF25	C.Platform323	Force	Z	-0.96	0.000	Rela	From start	0.000
	S - Servis Yükü	GCS	Uniform		1.000	Length		0.000
LF28	C.Platform326	Force	Z	-0.96	0.000	Rela	From start	0.000
	S - Servis Yükü	GCS	Uniform		1.000	Length		0.000
LF31	C.Platform329	Force	Z	-0.48	0.000	Rela	From start	0.000
	S - Servis Yükü	GCS	Uniform		1.000	Length		0.000
LF34	C.Platform332	Force	Z	-0.48	0.000	Rela	From start	0.000
	S - Servis Yükü	GCS	Uniform		1.000	Length		0.000
LF37	C.Platform335	Force	Z	-0.48	0.000	Rela	From start	0.000
	S - Servis Yükü	GCS	Uniform		1.000	Length		0.000
LF40	C.Platform338	Force	Z	-0.48	0.000	Rela	From start	0.000
	S - Servis Yükü	GCS	Uniform		1.000	Length		0.000
LF43	C.Platform341	Force	Z	-0.48	0.000	Rela	From start	0.000
	S - Servis Yükü	GCS	Uniform		1.000	Length		0.000
LF46	C.Platform344	Force	Z	-0.48	0.000	Rela	From start	0.000
	S - Servis Yükü	GCS	Uniform		1.000	Length		0.000
LF49	C.Platform347	Force	Z	-0.48	0.000	Rela	From start	0.000
	S - Servis Yükü	GCS	Uniform		1.000	Length		0.000
LF52	C.Platform350	Force	Z	-0.48	0.000	Rela	From start	0.000
	S - Servis Yükü	GCS	Uniform		1.000	Length		0.000
LF55	C.Platform353	Force	Z	-0.48	0.000	Rela	From start	0.000
	S - Servis Yükü	GCS	Uniform		1.000	Length		0.000
LF58	C.Platform356	Force	Z	-0.48	0.000	Rela	From start	0.000
	S - Servis Yükü	GCS	Uniform		1.000	Length		0.000
LF61	C.Platform269	Force	Z	-0.48	0.000	Rela	From start	0.000
	S - Servis Yükü	GCS	Uniform		1.000	Length		0.000
LF64	C.Platform272	Force	Z	-0.48	0.000	Rela	From start	0.000
	S - Servis Yükü	GCS	Uniform		1.000	Length		0.000
LF67	C.Platform275	Force	Z	-0.48	0.000	Rela	From start	0.000
	S - Servis Yükü	GCS	Uniform		1.000	Length		0.000
LF70	C.Platform278	Force	Z	-0.48	0.000	Rela	From start	0.000
	S - Servis Yükü	GCS	Uniform		1.000	Length		0.000
LF73	C.Platform281	Force	Z	-0.48	0.000	Rela	From start	0.000
	S - Servis Yükü	GCS	Uniform		1.000	Length		0.000
LF76	C.Platform284	Force	Z	-0.48	0.000	Rela	From start	0.000
	S - Servis Yükü	GCS	Uniform		1.000	Length		0.000
LF79	C.Platform287	Force	Z	-0.48	0.000	Rela	From start	0.000
	S - Servis Yükü	GCS	Uniform		1.000	Length		0.000
LF82	C.Platform290	Force	Z	-0.48	0.000	Rela	From start	0.000
	S - Servis Yükü	GCS	Uniform		1.000	Length		0.000
LF85	C.Platform293	Force	Z	-0.48	0.000	Rela	From start	0.000
	S - Servis Yükü	GCS	Uniform		1.000	Length		0.000
LF88	C.Platform296	Force	Z	-0.48	0.000	Rela	From start	0.000
	S - Servis Yükü	GCS	Uniform		1.000	Length		0.000
LF91	C.Platform299	Force	Z	-0.48	0.000	Rela	From start	0.000
	S1 - Servis Yükü %50	GCS	Uniform		1.000	Length		0.000
LF93	C.Platform301	Force	Z	-0.48	0.000	Rela	From start	0.000
	S1 - Servis Yükü %50	GCS	Uniform		1.000	Length		0.000
LF94	C.Platform302	Force	Z	-0.48	0.000	Rela	From start	0.000
	S1 - Servis Yükü %50	GCS	Uniform		1.000	Length		0.000
LF95	C.Platform303	Force	Z	-0.48	0.000	Rela	From start	0.000
	S1 - Servis Yükü %50	GCS	Uniform		1.000	Length		0.000
LF97	C.Platform305	Force	Z	-0.48	0.000	Rela	From start	0.000
	S1 - Servis Yükü %50	GCS	Uniform		1.000	Length		0.000
LF98	C.Platform306	Force	Z	-0.48	0.000	Rela	From start	0.000
	S1 - Servis Yükü %50	GCS	Uniform		1.000	Length		0.000
LF100	C.Platform308	Force	Z	-0.48	0.000	Rela	From start	0.000

Name	Member	Type	Dir	Value - P_1 [kN/m]	Pos x_1	Coor	Orig	Ecc ey [cm]
	Load case	System	Distribution	Value - P_2 [kN/m]	Pos x_2	Loc		Ecc ez [cm]
	S1 - Servis Yükü %50	GCS	Uniform		1.000	Length		0.000
LF101	C.Platform309	Force	Z	-0.48	0.000	Rela	From start	0.000
	S1 - Servis Yükü %50	GCS	Uniform		1.000	Length		0.000
LF103	C.Platform311	Force	Z	-0.48	0.000	Rela	From start	0.000
	S1 - Servis Yükü %50	GCS	Uniform		1.000	Length		0.000
LF104	C.Platform312	Force	Z	-0.48	0.000	Rela	From start	0.000
	S1 - Servis Yükü %50	GCS	Uniform		1.000	Length		0.000
LF106	C.Platform314	Force	Z	-0.48	0.000	Rela	From start	0.000
	S1 - Servis Yükü %50	GCS	Uniform		1.000	Length		0.000
LF107	C.Platform315	Force	Z	-0.48	0.000	Rela	From start	0.000
	S1 - Servis Yükü %50	GCS	Uniform		1.000	Length		0.000
LF109	C.Platform317	Force	Z	-0.48	0.000	Rela	From start	0.000
	S1 - Servis Yükü %50	GCS	Uniform		1.000	Length		0.000
LF110	C.Platform318	Force	Z	-0.48	0.000	Rela	From start	0.000
	S1 - Servis Yükü %50	GCS	Uniform		1.000	Length		0.000
LF112	C.Platform320	Force	Z	-0.48	0.000	Rela	From start	0.000
	S1 - Servis Yükü %50	GCS	Uniform		1.000	Length		0.000
LF113	C.Platform321	Force	Z	-0.48	0.000	Rela	From start	0.000
	S1 - Servis Yükü %50	GCS	Uniform		1.000	Length		0.000
LF115	C.Platform323	Force	Z	-0.48	0.000	Rela	From start	0.000
	S1 - Servis Yükü %50	GCS	Uniform		1.000	Length		0.000
LF116	C.Platform324	Force	Z	-0.48	0.000	Rela	From start	0.000
	S1 - Servis Yükü %50	GCS	Uniform		1.000	Length		0.000
LF118	C.Platform326	Force	Z	-0.48	0.000	Rela	From start	0.000
	S1 - Servis Yükü %50	GCS	Uniform		1.000	Length		0.000
LF119	C.Platform327	Force	Z	-0.48	0.000	Rela	From start	0.000
	S1 - Servis Yükü %50	GCS	Uniform		1.000	Length		0.000
LF121	300FDD6F0	Force	X	-0.01	0.000	Rela	From start	0.000
	Wx_Çalışma - Rüzgar Yükü	GCS	Uniform		1.000	Length		0.000
LF122	300FDD6F2	Force	X	-0.01	0.000	Rela	From start	0.000
	Wx_Çalışma - Rüzgar Yükü	GCS	Uniform		1.000	Length		0.000
LF123	300FDD6F4	Force	X	-0.01	0.000	Rela	From start	0.000
	Wx_Çalışma - Rüzgar Yükü	GCS	Uniform		1.000	Length		0.000
LF124	300FDD6F6	Force	X	-0.01	0.000	Rela	From start	0.000
	Wx_Çalışma - Rüzgar Yükü	GCS	Uniform		1.000	Length		0.000
LF125	300FDD6F8	Force	X	-0.01	0.000	Rela	From start	0.000
	Wx_Çalışma - Rüzgar Yükü	GCS	Uniform		1.000	Length		0.000
LF126	300FDD6F10	Force	X	-0.01	0.000	Rela	From start	0.000
	Wx_Çalışma - Rüzgar Yükü	GCS	Uniform		1.000	Length		0.000
LF127	300FDD6F12	Force	X	-0.01	0.000	Rela	From start	0.000
	Wx_Çalışma - Rüzgar Yükü	GCS	Uniform		1.000	Length		0.000
LF128	300FDD6F14	Force	X	-0.01	0.000	Rela	From start	0.000
	Wx_Çalışma - Rüzgar Yükü	GCS	Uniform		1.000	Length		0.000
LF129	300FDD6F16	Force	X	-0.01	0.000	Rela	From start	0.000
	Wx_Çalışma - Rüzgar Yükü	GCS	Uniform		1.000	Length		0.000
LF130	300FDD6F18	Force	X	-0.01	0.000	Rela	From start	0.000
	Wx_Çalışma - Rüzgar Yükü	GCS	Uniform		1.000	Length		0.000
LF131	300FDD6F20	Force	X	-0.01	0.000	Rela	From start	0.000
	Wx_Çalışma - Rüzgar Yükü	GCS	Uniform		1.000	Length		0.000
LF132	300FDD6F22	Force	X	-0.01	0.000	Rela	From start	0.000
	Wx_Çalışma - Rüzgar Yükü	GCS	Uniform		1.000	Length		0.000
LF133	300FDD6F24	Force	X	-0.01	0.000	Rela	From start	0.000
	Wx_Çalışma - Rüzgar Yükü	GCS	Uniform		1.000	Length		0.000
LF134	300FDD6F26	Force	X	-0.01	0.000	Rela	From start	0.000
	Wx_Çalışma - Rüzgar Yükü	GCS	Uniform		1.000	Length		0.000
LF135	300FDD6F28	Force	X	-0.01	0.000	Rela	From start	0.000
	Wx_Çalışma - Rüzgar Yükü	GCS	Uniform		1.000	Length		0.000
LF136	300FDD6F30	Force	X	-0.01	0.000	Rela	From start	0.000
	Wx_Çalışma - Rüzgar Yükü	GCS	Uniform		1.000	Length		0.000
LF137	300FDD6F32	Force	X	-0.01	0.000	Rela	From start	0.000
	Wx_Çalışma - Rüzgar Yükü	GCS	Uniform		1.000	Length		0.000
LF138	300FDD6F34	Force	X	-0.01	0.000	Rela	From start	0.000
	Wx_Çalışma - Rüzgar Yükü	GCS	Uniform		1.000	Length		0.000
LF139	300FDD6F36	Force	X	-0.01	0.000	Rela	From start	0.000
	Wx_Çalışma - Rüzgar Yükü	GCS	Uniform		1.000	Length		0.000
LF140	300FDD6F38	Force	X	-0.01	0.000	Rela	From start	0.000
	Wx_Çalışma - Rüzgar Yükü	GCS	Uniform		1.000	Length		0.000
LF141	300FDD6F40	Force	X	-0.01	0.000	Rela	From start	0.000
	Wx_Çalışma - Rüzgar Yükü	GCS	Uniform		1.000	Length		0.000
LF142	300FDD6F42	Force	X	-0.01	0.000	Rela	From start	0.000
	Wx_Çalışma - Rüzgar Yükü	GCS	Uniform		1.000	Length		0.000
LF143	300FDD6F44	Force	X	-0.01	0.000	Rela	From start	0.000
	Wx_Çalışma - Rüzgar Yükü	GCS	Uniform		1.000	Length		0.000
LF144	300FDD6F46	Force	X	-0.01	0.000	Rela	From start	0.000

Name	Member	Type	Dir	Value - P_1 [kN/m]	Pos x_1	Coor	Orig	Ecc ey [cm]
	Load case	System	Distribution	Value - P_2 [kN/m]	Pos x_2	Loc		Ecc ez [cm]
	Wx_Çalışma - Rüzgar Yükü	GCS	Uniform		1.000	Length		0.000
LF145	300FDD6F48	Force	X	-0.01	0.000	Rela	From start	0.000
	Wx_Çalışma - Rüzgar Yükü	GCS	Uniform		1.000	Length		0.000
LF146	300FDD6F50	Force	X	-0.01	0.000	Rela	From start	0.000
	Wx_Çalışma - Rüzgar Yükü	GCS	Uniform		1.000	Length		0.000
LF147	300FDD6F52	Force	X	-0.01	0.000	Rela	From start	0.000
	Wx_Çalışma - Rüzgar Yükü	GCS	Uniform		1.000	Length		0.000
LF148	300FDD6F54	Force	X	-0.01	0.000	Rela	From start	0.000
	Wx_Çalışma - Rüzgar Yükü	GCS	Uniform		1.000	Length		0.000
LF149	300FDD6F56	Force	X	-0.01	0.000	Rela	From start	0.000
	Wx_Çalışma - Rüzgar Yükü	GCS	Uniform		1.000	Length		0.000
LF150	300FDD6F58	Force	X	-0.01	0.000	Rela	From start	0.000
	Wx_Çalışma - Rüzgar Yükü	GCS	Uniform		1.000	Length		0.000
LF151	300FDD6F60	Force	X	-0.01	0.000	Rela	From start	0.000
	Wx_Çalışma - Rüzgar Yükü	GCS	Uniform		1.000	Length		0.000
LF152	300FDD6F62	Force	X	-0.01	0.000	Rela	From start	0.000
	Wx_Çalışma - Rüzgar Yükü	GCS	Uniform		1.000	Length		0.000
LF153	300FDD6F64	Force	X	-0.01	0.000	Rela	From start	0.000
	Wx_Çalışma - Rüzgar Yükü	GCS	Uniform		1.000	Length		0.000
LF154	300FDD6F66	Force	X	-0.01	0.000	Rela	From start	0.000
	Wx_Çalışma - Rüzgar Yükü	GCS	Uniform		1.000	Length		0.000
LF155	300FDD6F68	Force	X	-0.01	0.000	Rela	From start	0.000
	Wx_Çalışma - Rüzgar Yükü	GCS	Uniform		1.000	Length		0.000
LF156	300FDD6F70	Force	X	-0.01	0.000	Rela	From start	0.000
	Wx_Çalışma - Rüzgar Yükü	GCS	Uniform		1.000	Length		0.000
LF157	300FDD6F72	Force	X	-0.01	0.000	Rela	From start	0.000
	Wx_Çalışma - Rüzgar Yükü	GCS	Uniform		1.000	Length		0.000
LF158	300FDD6F74	Force	X	-0.01	0.000	Rela	From start	0.000
	Wx_Çalışma - Rüzgar Yükü	GCS	Uniform		1.000	Length		0.000
LF159	300FDD6F76	Force	X	-0.01	0.000	Rela	From start	0.000
	Wx_Çalışma - Rüzgar Yükü	GCS	Uniform		1.000	Length		0.000
LF160	300FDD6F78	Force	X	-0.01	0.000	Rela	From start	0.000
	Wx_Çalışma - Rüzgar Yükü	GCS	Uniform		1.000	Length		0.000
LF161	300FDD6F80	Force	X	-0.01	0.000	Rela	From start	0.000
	Wx_Çalışma - Rüzgar Yükü	GCS	Uniform		1.000	Length		0.000
LF162	300FDD6F82	Force	X	-0.01	0.000	Rela	From start	0.000
	Wx_Çalışma - Rüzgar Yükü	GCS	Uniform		1.000	Length		0.000
LF163	300FDD6F84	Force	X	-0.01	0.000	Rela	From start	0.000
	Wx_Çalışma - Rüzgar Yükü	GCS	Uniform		1.000	Length		0.000
LF164	300FDD6F86	Force	X	-0.01	0.000	Rela	From start	0.000
	Wx_Çalışma - Rüzgar Yükü	GCS	Uniform		1.000	Length		0.000
LF165	300FDD6F88	Force	X	-0.01	0.000	Rela	From start	0.000
	Wx_Çalışma - Rüzgar Yükü	GCS	Uniform		1.000	Length		0.000
LF166	300FDD6F90	Force	X	-0.01	0.000	Rela	From start	0.000
	Wx_Çalışma - Rüzgar Yükü	GCS	Uniform		1.000	Length		0.000
LF167	300FDD6F92	Force	X	-0.01	0.000	Rela	From start	0.000
	Wx_Çalışma - Rüzgar Yükü	GCS	Uniform		1.000	Length		0.000
LF168	300FDD6F94	Force	X	-0.01	0.000	Rela	From start	0.000
	Wx_Çalışma - Rüzgar Yükü	GCS	Uniform		1.000	Length		0.000
LF169	300FDD6F96	Force	X	-0.01	0.000	Rela	From start	0.000
	Wx_Çalışma - Rüzgar Yükü	GCS	Uniform		1.000	Length		0.000
LF170	300FDD6F98	Force	X	-0.01	0.000	Rela	From start	0.000
	Wx_Çalışma - Rüzgar Yükü	GCS	Uniform		1.000	Length		0.000
LF171	300FDD6F100	Force	X	-0.01	0.000	Rela	From start	0.000
	Wx_Çalışma - Rüzgar Yükü	GCS	Uniform		1.000	Length		0.000
LF172	300FDD6F102	Force	X	-0.01	0.000	Rela	From start	0.000
	Wx_Çalışma - Rüzgar Yükü	GCS	Uniform		1.000	Length		0.000
LF173	300FDD6F104	Force	X	-0.01	0.000	Rela	From start	0.000
	Wx_Çalışma - Rüzgar Yükü	GCS	Uniform		1.000	Length		0.000
LF174	300FDD6F106	Force	X	-0.01	0.000	Rela	From start	0.000
	Wx_Çalışma - Rüzgar Yükü	GCS	Uniform		1.000	Length		0.000
LF175	300FDD6F108	Force	X	-0.01	0.000	Rela	From start	0.000
	Wx_Çalışma - Rüzgar Yükü	GCS	Uniform		1.000	Length		0.000
LF176	300FDD6F110	Force	X	-0.01	0.000	Rela	From start	0.000
	Wx_Çalışma - Rüzgar Yükü	GCS	Uniform		1.000	Length		0.000
LF177	300FDD6F112	Force	X	-0.01	0.000	Rela	From start	0.000
	Wx_Çalışma - Rüzgar Yükü	GCS	Uniform		1.000	Length		0.000
LF178	300FDD6F114	Force	X	-0.01	0.000	Rela	From start	0.000
	Wx_Çalışma - Rüzgar Yükü	GCS	Uniform		1.000	Length		0.000
LF179	300FDD6F116	Force	X	-0.01	0.000	Rela	From start	0.000
	Wx_Çalışma - Rüzgar Yükü	GCS	Uniform		1.000	Length		0.000
LF180	300FDD6F118	Force	X	-0.01	0.000	Rela	From start	0.000
	Wx_Çalışma - Rüzgar Yükü	GCS	Uniform		1.000	Length		0.000
LF181	300FDD6F120	Force	X	-0.01	0.000	Rela	From start	0.000

Name	Member	Type	Dir	Value - P_1 [kN/m]	Pos x_1	Coor	Orig	Ecc ey [cm]
	Load case	System	Distribution	Value - P_2 [kN/m]	Pos x_2	Loc		Ecc ez [cm]
	Wx_Çalışma - Rüzgar Yükü	GCS	Uniform		1.000	Length		0.000
LF182	300FDD6F122	Force	X	-0.01	0.000	Rela	From start	0.000
	Wx_Çalışma - Rüzgar Yükü	GCS	Uniform		1.000	Length		0.000
LF183	300FDD6F124	Force	X	-0.01	0.000	Rela	From start	0.000
	Wx_Çalışma - Rüzgar Yükü	GCS	Uniform		1.000	Length		0.000
LF184	300FDD6F126	Force	X	-0.01	0.000	Rela	From start	0.000
	Wx_Çalışma - Rüzgar Yükü	GCS	Uniform		1.000	Length		0.000
LF185	300FDD6F128	Force	X	-0.01	0.000	Rela	From start	0.000
	Wx_Çalışma - Rüzgar Yükü	GCS	Uniform		1.000	Length		0.000
LF186	300FDD6F130	Force	X	-0.01	0.000	Rela	From start	0.000
	Wx_Çalışma - Rüzgar Yükü	GCS	Uniform		1.000	Length		0.000
LF187	300FDD6F132	Force	X	-0.01	0.000	Rela	From start	0.000
	Wx_Çalışma - Rüzgar Yükü	GCS	Uniform		1.000	Length		0.000
LF188	300FDD6F134	Force	X	-0.01	0.000	Rela	From start	0.000
	Wx_Çalışma - Rüzgar Yükü	GCS	Uniform		1.000	Length		0.000
LF189	300FDD6F136	Force	X	-0.01	0.000	Rela	From start	0.000
	Wx_Çalışma - Rüzgar Yükü	GCS	Uniform		1.000	Length		0.000
LF190	300FDD6F138	Force	X	-0.01	0.000	Rela	From start	0.000
	Wx_Çalışma - Rüzgar Yükü	GCS	Uniform		1.000	Length		0.000
LF191	300FDD6F140	Force	X	-0.01	0.000	Rela	From start	0.000
	Wx_Çalışma - Rüzgar Yükü	GCS	Uniform		1.000	Length		0.000
LF192	300FDD6F142	Force	X	-0.01	0.000	Rela	From start	0.000
	Wx_Çalışma - Rüzgar Yükü	GCS	Uniform		1.000	Length		0.000
LF193	300FDD6F144	Force	X	-0.01	0.000	Rela	From start	0.000
	Wx_Çalışma - Rüzgar Yükü	GCS	Uniform		1.000	Length		0.000
LF194	300FDD6F146	Force	X	-0.01	0.000	Rela	From start	0.000
	Wx_Çalışma - Rüzgar Yükü	GCS	Uniform		1.000	Length		0.000
LF195	300FDD6F148	Force	X	-0.01	0.000	Rela	From start	0.000
	Wx_Çalışma - Rüzgar Yükü	GCS	Uniform		1.000	Length		0.000
LF196	300FDD6F150	Force	X	-0.01	0.000	Rela	From start	0.000
	Wx_Çalışma - Rüzgar Yükü	GCS	Uniform		1.000	Length		0.000
LF197	300FDD6F152	Force	X	-0.01	0.000	Rela	From start	0.000
	Wx_Çalışma - Rüzgar Yükü	GCS	Uniform		1.000	Length		0.000
LF198	300FDD6F154	Force	X	-0.01	0.000	Rela	From start	0.000
	Wx_Çalışma - Rüzgar Yükü	GCS	Uniform		1.000	Length		0.000
LF199	300FDD6F156	Force	X	-0.01	0.000	Rela	From start	0.000
	Wx_Çalışma - Rüzgar Yükü	GCS	Uniform		1.000	Length		0.000
LF200	300FDD6F158	Force	X	-0.01	0.000	Rela	From start	0.000
	Wx_Çalışma - Rüzgar Yükü	GCS	Uniform		1.000	Length		0.000
LF201	300FDD6F160	Force	X	-0.01	0.000	Rela	From start	0.000
	Wx_Çalışma - Rüzgar Yükü	GCS	Uniform		1.000	Length		0.000
LF202	300FDD6F162	Force	X	-0.01	0.000	Rela	From start	0.000
	Wx_Çalışma - Rüzgar Yükü	GCS	Uniform		1.000	Length		0.000
LF203	300FDD6F164	Force	X	-0.01	0.000	Rela	From start	0.000
	Wx_Çalışma - Rüzgar Yükü	GCS	Uniform		1.000	Length		0.000
LF204	300FDD6F166	Force	X	-0.01	0.000	Rela	From start	0.000
	Wx_Çalışma - Rüzgar Yükü	GCS	Uniform		1.000	Length		0.000
LF205	300FDD6F168	Force	X	-0.01	0.000	Rela	From start	0.000
	Wx_Çalışma - Rüzgar Yükü	GCS	Uniform		1.000	Length		0.000
LF206	300FDD6F170	Force	X	-0.01	0.000	Rela	From start	0.000
	Wx_Çalışma - Rüzgar Yükü	GCS	Uniform		1.000	Length		0.000
LF207	300FDD6F172	Force	X	-0.01	0.000	Rela	From start	0.000
	Wx_Çalışma - Rüzgar Yükü	GCS	Uniform		1.000	Length		0.000
LF208	300FDD6F174	Force	X	-0.01	0.000	Rela	From start	0.000
	Wx_Çalışma - Rüzgar Yükü	GCS	Uniform		1.000	Length		0.000
LF210	300YKB1	Force	X	-0.01	0.000	Rela	From start	0.000
	Wx_Çalışma - Rüzgar Yükü	GCS	Uniform		1.000	Length		0.000
LF211	300YKB2	Force	X	-0.01	0.000	Rela	From start	0.000
	Wx_Çalışma - Rüzgar Yükü	GCS	Uniform		1.000	Length		0.000
LF213	300YKB4	Force	X	-0.01	0.000	Rela	From start	0.000
	Wx_Çalışma - Rüzgar Yükü	GCS	Uniform		1.000	Length		0.000
LF214	300YKB5	Force	X	-0.01	0.000	Rela	From start	0.000
	Wx_Çalışma - Rüzgar Yükü	GCS	Uniform		1.000	Length		0.000
LF216	300YKB7	Force	X	-0.01	0.000	Rela	From start	0.000
	Wx_Çalışma - Rüzgar Yükü	GCS	Uniform		1.000	Length		0.000
LF217	300YKB8	Force	X	-0.01	0.000	Rela	From start	0.000
	Wx_Çalışma - Rüzgar Yükü	GCS	Uniform		1.000	Length		0.000
LF219	300YKB10	Force	X	-0.01	0.000	Rela	From start	0.000
	Wx_Çalışma - Rüzgar Yükü	GCS	Uniform		1.000	Length		0.000
LF220	300YKB11	Force	X	-0.01	0.000	Rela	From start	0.000
	Wx_Çalışma - Rüzgar Yükü	GCS	Uniform		1.000	Length		0.000
LF222	300YKB13	Force	X	-0.01	0.000	Rela	From start	0.000
	Wx_Çalışma - Rüzgar Yükü	GCS	Uniform		1.000	Length		0.000
LF223	300YKB14	Force	X	-0.01	0.000	Rela	From start	0.000

Name	Member	Type	Dir	Value - P_1 [kN/m]	Pos x_1	Coor	Orig	Ecc ey [cm]
	Load case	System	Distribution	Value - P_2 [kN/m]	Pos x_2	Loc		Ecc ez [cm]
	Wx_Çalışma - Rüzgar Yükü	GCS	Uniform		1.000	Length		0.000
LF225	300YKB16	Force	X	-0.01	0.000	Rela	From start	0.000
	Wx_Çalışma - Rüzgar Yükü	GCS	Uniform		1.000	Length		0.000
LF226	300YKB17	Force	X	-0.01	0.000	Rela	From start	0.000
	Wx_Çalışma - Rüzgar Yükü	GCS	Uniform		1.000	Length		0.000
LF228	300YKB19	Force	X	-0.01	0.000	Rela	From start	0.000
	Wx_Çalışma - Rüzgar Yükü	GCS	Uniform		1.000	Length		0.000
LF229	300YKB20	Force	X	-0.01	0.000	Rela	From start	0.000
	Wx_Çalışma - Rüzgar Yükü	GCS	Uniform		1.000	Length		0.000
LF231	300YKB22	Force	X	-0.01	0.000	Rela	From start	0.000
	Wx_Çalışma - Rüzgar Yükü	GCS	Uniform		1.000	Length		0.000
LF232	300YKB23	Force	X	-0.01	0.000	Rela	From start	0.000
	Wx_Çalışma - Rüzgar Yükü	GCS	Uniform		1.000	Length		0.000
LF234	300YKB25	Force	X	-0.01	0.000	Rela	From start	0.000
	Wx_Çalışma - Rüzgar Yükü	GCS	Uniform		1.000	Length		0.000
LF235	300YKB26	Force	X	-0.01	0.000	Rela	From start	0.000
	Wx_Çalışma - Rüzgar Yükü	GCS	Uniform		1.000	Length		0.000
LF237	300YKB28	Force	X	-0.01	0.000	Rela	From start	0.000
	Wx_Çalışma - Rüzgar Yükü	GCS	Uniform		1.000	Length		0.000
LF238	300YKB29	Force	X	-0.01	0.000	Rela	From start	0.000
	Wx_Çalışma - Rüzgar Yükü	GCS	Uniform		1.000	Length		0.000
LF240	300YKB31	Force	X	-0.01	0.000	Rela	From start	0.000
	Wx_Çalışma - Rüzgar Yükü	GCS	Uniform		1.000	Length		0.000
LF241	300YKB32	Force	X	-0.01	0.000	Rela	From start	0.000
	Wx_Çalışma - Rüzgar Yükü	GCS	Uniform		1.000	Length		0.000
LF243	300YKB34	Force	X	-0.01	0.000	Rela	From start	0.000
	Wx_Çalışma - Rüzgar Yükü	GCS	Uniform		1.000	Length		0.000
LF244	300YKB35	Force	X	-0.01	0.000	Rela	From start	0.000
	Wx_Çalışma - Rüzgar Yükü	GCS	Uniform		1.000	Length		0.000
LF246	300YKB37	Force	X	-0.01	0.000	Rela	From start	0.000
	Wx_Çalışma - Rüzgar Yükü	GCS	Uniform		1.000	Length		0.000
LF247	300YKB38	Force	X	-0.01	0.000	Rela	From start	0.000
	Wx_Çalışma - Rüzgar Yükü	GCS	Uniform		1.000	Length		0.000
LF249	300YKB40	Force	X	-0.01	0.000	Rela	From start	0.000
	Wx_Çalışma - Rüzgar Yükü	GCS	Uniform		1.000	Length		0.000
LF250	300YKB41	Force	X	-0.01	0.000	Rela	From start	0.000
	Wx_Çalışma - Rüzgar Yükü	GCS	Uniform		1.000	Length		0.000
LF252	300YKB43	Force	X	-0.01	0.000	Rela	From start	0.000
	Wx_Çalışma - Rüzgar Yükü	GCS	Uniform		1.000	Length		0.000
LF253	300YKB44	Force	X	-0.01	0.000	Rela	From start	0.000
	Wx_Çalışma - Rüzgar Yükü	GCS	Uniform		1.000	Length		0.000
LF255	300YKB46	Force	X	-0.01	0.000	Rela	From start	0.000
	Wx_Çalışma - Rüzgar Yükü	GCS	Uniform		1.000	Length		0.000
LF256	300YKB47	Force	X	-0.01	0.000	Rela	From start	0.000
	Wx_Çalışma - Rüzgar Yükü	GCS	Uniform		1.000	Length		0.000
LF258	300YKB49	Force	X	-0.01	0.000	Rela	From start	0.000
	Wx_Çalışma - Rüzgar Yükü	GCS	Uniform		1.000	Length		0.000
LF259	300YKB50	Force	X	-0.01	0.000	Rela	From start	0.000
	Wx_Çalışma - Rüzgar Yükü	GCS	Uniform		1.000	Length		0.000
LF261	300YKB52	Force	X	-0.01	0.000	Rela	From start	0.000
	Wx_Çalışma - Rüzgar Yükü	GCS	Uniform		1.000	Length		0.000
LF262	300YKB53	Force	X	-0.01	0.000	Rela	From start	0.000
	Wx_Çalışma - Rüzgar Yükü	GCS	Uniform		1.000	Length		0.000
LF264	300YKB55	Force	X	-0.01	0.000	Rela	From start	0.000
	Wx_Çalışma - Rüzgar Yükü	GCS	Uniform		1.000	Length		0.000
LF265	300YKB56	Force	X	-0.01	0.000	Rela	From start	0.000
	Wx_Çalışma - Rüzgar Yükü	GCS	Uniform		1.000	Length		0.000
LF267	300YKB58	Force	X	-0.01	0.000	Rela	From start	0.000
	Wx_Çalışma - Rüzgar Yükü	GCS	Uniform		1.000	Length		0.000
LF268	300YKB59	Force	X	-0.01	0.000	Rela	From start	0.000
	Wx_Çalışma - Rüzgar Yükü	GCS	Uniform		1.000	Length		0.000
LF270	300YKB61	Force	X	-0.01	0.000	Rela	From start	0.000
	Wx_Çalışma - Rüzgar Yükü	GCS	Uniform		1.000	Length		0.000
LF271	300YKB62	Force	X	-0.01	0.000	Rela	From start	0.000
	Wx_Çalışma - Rüzgar Yükü	GCS	Uniform		1.000	Length		0.000
LF273	300YKB64	Force	X	-0.01	0.000	Rela	From start	0.000
	Wx_Çalışma - Rüzgar Yükü	GCS	Uniform		1.000	Length		0.000
LF274	300YKB65	Force	X	-0.01	0.000	Rela	From start	0.000
	Wx_Çalışma - Rüzgar Yükü	GCS	Uniform		1.000	Length		0.000
LF276	300YKB67	Force	X	-0.01	0.000	Rela	From start	0.000
	Wx_Çalışma - Rüzgar Yükü	GCS	Uniform		1.000	Length		0.000
LF277	300YKB68	Force	X	-0.01	0.000	Rela	From start	0.000
	Wx_Çalışma - Rüzgar Yükü	GCS	Uniform		1.000	Length		0.000
LF279	300YKB70	Force	X	-0.01	0.000	Rela	From start	0.000

Name	Member	Type	Dir	Value - P_1 [kN/m]	Pos x_1	Coor	Orig	Ecc ey [cm]
	Load case	System	Distribution	Value - P_2 [kN/m]	Pos x_2	Loc		Ecc ez [cm]
	Wx_Çalışma - Rüzgar Yükü	GCS	Uniform		1.000	Length		0.000
LF280	300YKB71	Force	X	-0.01	0.000	Rela	From start	0.000
	Wx_Çalışma - Rüzgar Yükü	GCS	Uniform		1.000	Length		0.000
LF282	300YKB73	Force	X	-0.01	0.000	Rela	From start	0.000
	Wx_Çalışma - Rüzgar Yükü	GCS	Uniform		1.000	Length		0.000
LF283	300YKB74	Force	X	-0.01	0.000	Rela	From start	0.000
	Wx_Çalışma - Rüzgar Yükü	GCS	Uniform		1.000	Length		0.000
LF285	300YKB76	Force	X	-0.01	0.000	Rela	From start	0.000
	Wx_Çalışma - Rüzgar Yükü	GCS	Uniform		1.000	Length		0.000
LF286	300YKB77	Force	X	-0.01	0.000	Rela	From start	0.000
	Wx_Çalışma - Rüzgar Yükü	GCS	Uniform		1.000	Length		0.000
LF288	300YKB79	Force	X	-0.01	0.000	Rela	From start	0.000
	Wx_Çalışma - Rüzgar Yükü	GCS	Uniform		1.000	Length		0.000
LF289	300YKB80	Force	X	-0.01	0.000	Rela	From start	0.000
	Wx_Çalışma - Rüzgar Yükü	GCS	Uniform		1.000	Length		0.000
LF291	300YKB82	Force	X	-0.01	0.000	Rela	From start	0.000
	Wx_Çalışma - Rüzgar Yükü	GCS	Uniform		1.000	Length		0.000
LF292	300YKB83	Force	X	-0.01	0.000	Rela	From start	0.000
	Wx_Çalışma - Rüzgar Yükü	GCS	Uniform		1.000	Length		0.000
LF294	300YKB85	Force	X	-0.01	0.000	Rela	From start	0.000
	Wx_Çalışma - Rüzgar Yükü	GCS	Uniform		1.000	Length		0.000
LF295	300YKB86	Force	X	-0.01	0.000	Rela	From start	0.000
	Wx_Çalışma - Rüzgar Yükü	GCS	Uniform		1.000	Length		0.000
LF297	300YKB88	Force	X	-0.01	0.000	Rela	From start	0.000
	Wx_Çalışma - Rüzgar Yükü	GCS	Uniform		1.000	Length		0.000
LF298	300YKB89	Force	X	-0.01	0.000	Rela	From start	0.000
	Wx_Çalışma - Rüzgar Yükü	GCS	Uniform		1.000	Length		0.000
LF300	300YKB91	Force	X	-0.01	0.000	Rela	From start	0.000
	Wx_Çalışma - Rüzgar Yükü	GCS	Uniform		1.000	Length		0.000
LF301	300YKB92	Force	X	-0.01	0.000	Rela	From start	0.000
	Wx_Çalışma - Rüzgar Yükü	GCS	Uniform		1.000	Length		0.000
LF303	300YKB94	Force	X	-0.01	0.000	Rela	From start	0.000
	Wx_Çalışma - Rüzgar Yükü	GCS	Uniform		1.000	Length		0.000
LF304	300YKB95	Force	X	-0.01	0.000	Rela	From start	0.000
	Wx_Çalışma - Rüzgar Yükü	GCS	Uniform		1.000	Length		0.000
LF306	300YKB97	Force	X	-0.01	0.000	Rela	From start	0.000
	Wx_Çalışma - Rüzgar Yükü	GCS	Uniform		1.000	Length		0.000
LF307	300YKB98	Force	X	-0.01	0.000	Rela	From start	0.000
	Wx_Çalışma - Rüzgar Yükü	GCS	Uniform		1.000	Length		0.000
LF309	300YKB100	Force	X	-0.01	0.000	Rela	From start	0.000
	Wx_Çalışma - Rüzgar Yükü	GCS	Uniform		1.000	Length		0.000
LF310	300YKB101	Force	X	-0.01	0.000	Rela	From start	0.000
	Wx_Çalışma - Rüzgar Yükü	GCS	Uniform		1.000	Length		0.000
LF312	300YKB103	Force	X	-0.01	0.000	Rela	From start	0.000
	Wx_Çalışma - Rüzgar Yükü	GCS	Uniform		1.000	Length		0.000
LF313	300YKB104	Force	X	-0.01	0.000	Rela	From start	0.000
	Wx_Çalışma - Rüzgar Yükü	GCS	Uniform		1.000	Length		0.000
LF315	300YKB106	Force	X	-0.01	0.000	Rela	From start	0.000
	Wx_Çalışma - Rüzgar Yükü	GCS	Uniform		1.000	Length		0.000
LF316	300YKB107	Force	X	-0.01	0.000	Rela	From start	0.000
	Wx_Çalışma - Rüzgar Yükü	GCS	Uniform		1.000	Length		0.000
LF318	300YKB109	Force	X	-0.01	0.000	Rela	From start	0.000
	Wx_Çalışma - Rüzgar Yükü	GCS	Uniform		1.000	Length		0.000
LF319	300YKB110	Force	X	-0.01	0.000	Rela	From start	0.000
	Wx_Çalışma - Rüzgar Yükü	GCS	Uniform		1.000	Length		0.000
LF321	300YKB112	Force	X	-0.01	0.000	Rela	From start	0.000
	Wx_Çalışma - Rüzgar Yükü	GCS	Uniform		1.000	Length		0.000
LF322	300YKB113	Force	X	-0.01	0.000	Rela	From start	0.000
	Wx_Çalışma - Rüzgar Yükü	GCS	Uniform		1.000	Length		0.000
LF324	300YKB115	Force	X	-0.01	0.000	Rela	From start	0.000
	Wx_Çalışma - Rüzgar Yükü	GCS	Uniform		1.000	Length		0.000
LF325	300YKB116	Force	X	-0.01	0.000	Rela	From start	0.000
	Wx_Çalışma - Rüzgar Yükü	GCS	Uniform		1.000	Length		0.000
LF327	300YKB118	Force	X	-0.01	0.000	Rela	From start	0.000
	Wx_Çalışma - Rüzgar Yükü	GCS	Uniform		1.000	Length		0.000
LF328	300YKB119	Force	X	-0.01	0.000	Rela	From start	0.000
	Wx_Çalışma - Rüzgar Yükü	GCS	Uniform		1.000	Length		0.000
LF330	300YKB121	Force	X	-0.01	0.000	Rela	From start	0.000
	Wx_Çalışma - Rüzgar Yükü	GCS	Uniform		1.000	Length		0.000
LF331	300YKB122	Force	X	-0.01	0.000	Rela	From start	0.000
	Wx_Çalışma - Rüzgar Yükü	GCS	Uniform		1.000	Length		0.000
LF333	300YKB124	Force	X	-0.01	0.000	Rela	From start	0.000
	Wx_Çalışma - Rüzgar Yükü	GCS	Uniform		1.000	Length		0.000
LF334	300YKB125	Force	X	-0.01	0.000	Rela	From start	0.000

Name	Member	Type	Dir	Value - P_1 [kN/m]	Pos x_1	Coor	Orig	Ecc ey [cm]
	Load case	System	Distribution	Value - P_2 [kN/m]	Pos x_2	Loc		Ecc ez [cm]
	Wx_Çalışma - Rüzgar Yükü	GCS	Uniform		1.000	Length		0.000
LF336	300YKB127	Force	X	-0.01	0.000	Rela	From start	0.000
	Wx_Çalışma - Rüzgar Yükü	GCS	Uniform		1.000	Length		0.000
LF337	300YKB128	Force	X	-0.01	0.000	Rela	From start	0.000
	Wx_Çalışma - Rüzgar Yükü	GCS	Uniform		1.000	Length		0.000
LF339	300YKB130	Force	X	-0.01	0.000	Rela	From start	0.000
	Wx_Çalışma - Rüzgar Yükü	GCS	Uniform		1.000	Length		0.000
LF340	300YKB131	Force	X	-0.01	0.000	Rela	From start	0.000
	Wx_Çalışma - Rüzgar Yükü	GCS	Uniform		1.000	Length		0.000
LF342	300YKB133	Force	X	-0.01	0.000	Rela	From start	0.000
	Wx_Çalışma - Rüzgar Yükü	GCS	Uniform		1.000	Length		0.000
LF343	300YKB134	Force	X	-0.01	0.000	Rela	From start	0.000
	Wx_Çalışma - Rüzgar Yükü	GCS	Uniform		1.000	Length		0.000
LF345	300YKB136	Force	X	-0.01	0.000	Rela	From start	0.000
	Wx_Çalışma - Rüzgar Yükü	GCS	Uniform		1.000	Length		0.000
LF346	300YKB137	Force	X	-0.01	0.000	Rela	From start	0.000
	Wx_Çalışma - Rüzgar Yükü	GCS	Uniform		1.000	Length		0.000
LF348	300YKB139	Force	X	-0.01	0.000	Rela	From start	0.000
	Wx_Çalışma - Rüzgar Yükü	GCS	Uniform		1.000	Length		0.000
LF349	300YKB140	Force	X	-0.01	0.000	Rela	From start	0.000
	Wx_Çalışma - Rüzgar Yükü	GCS	Uniform		1.000	Length		0.000
LF351	300YKB142	Force	X	-0.01	0.000	Rela	From start	0.000
	Wx_Çalışma - Rüzgar Yükü	GCS	Uniform		1.000	Length		0.000
LF352	300YKB143	Force	X	-0.01	0.000	Rela	From start	0.000
	Wx_Çalışma - Rüzgar Yükü	GCS	Uniform		1.000	Length		0.000
LF354	300YKB145	Force	X	-0.01	0.000	Rela	From start	0.000
	Wx_Çalışma - Rüzgar Yükü	GCS	Uniform		1.000	Length		0.000
LF355	300YKB146	Force	X	-0.01	0.000	Rela	From start	0.000
	Wx_Çalışma - Rüzgar Yükü	GCS	Uniform		1.000	Length		0.000
LF357	300YKB148	Force	X	-0.01	0.000	Rela	From start	0.000
	Wx_Çalışma - Rüzgar Yükü	GCS	Uniform		1.000	Length		0.000
LF358	300YKB149	Force	X	-0.01	0.000	Rela	From start	0.000
	Wx_Çalışma - Rüzgar Yükü	GCS	Uniform		1.000	Length		0.000
LF360	300YKB151	Force	X	-0.01	0.000	Rela	From start	0.000
	Wx_Çalışma - Rüzgar Yükü	GCS	Uniform		1.000	Length		0.000
LF361	300YKB152	Force	X	-0.01	0.000	Rela	From start	0.000
	Wx_Çalışma - Rüzgar Yükü	GCS	Uniform		1.000	Length		0.000
LF363	300YKB154	Force	X	-0.01	0.000	Rela	From start	0.000
	Wx_Çalışma - Rüzgar Yükü	GCS	Uniform		1.000	Length		0.000
LF364	300YKB155	Force	X	-0.01	0.000	Rela	From start	0.000
	Wx_Çalışma - Rüzgar Yükü	GCS	Uniform		1.000	Length		0.000
LF366	300YKB157	Force	X	-0.01	0.000	Rela	From start	0.000
	Wx_Çalışma - Rüzgar Yükü	GCS	Uniform		1.000	Length		0.000
LF367	300YKB158	Force	X	-0.01	0.000	Rela	From start	0.000
	Wx_Çalışma - Rüzgar Yükü	GCS	Uniform		1.000	Length		0.000
LF369	300YKB160	Force	X	-0.01	0.000	Rela	From start	0.000
	Wx_Çalışma - Rüzgar Yükü	GCS	Uniform		1.000	Length		0.000
LF370	300YKB161	Force	X	-0.01	0.000	Rela	From start	0.000
	Wx_Çalışma - Rüzgar Yükü	GCS	Uniform		1.000	Length		0.000
LF372	300YKB163	Force	X	-0.01	0.000	Rela	From start	0.000
	Wx_Çalışma - Rüzgar Yükü	GCS	Uniform		1.000	Length		0.000
LF373	300YKB164	Force	X	-0.01	0.000	Rela	From start	0.000
	Wx_Çalışma - Rüzgar Yükü	GCS	Uniform		1.000	Length		0.000
LF375	300YKB166	Force	X	-0.01	0.000	Rela	From start	0.000
	Wx_Çalışma - Rüzgar Yükü	GCS	Uniform		1.000	Length		0.000
LF376	300YKB167	Force	X	-0.01	0.000	Rela	From start	0.000
	Wx_Çalışma - Rüzgar Yükü	GCS	Uniform		1.000	Length		0.000
LF378	300YKB169	Force	X	-0.01	0.000	Rela	From start	0.000
	Wx_Çalışma - Rüzgar Yükü	GCS	Uniform		1.000	Length		0.000
LF379	300YKB170	Force	X	-0.01	0.000	Rela	From start	0.000
	Wx_Çalışma - Rüzgar Yükü	GCS	Uniform		1.000	Length		0.000
LF381	300YKB172	Force	X	-0.01	0.000	Rela	From start	0.000
	Wx_Çalışma - Rüzgar Yükü	GCS	Uniform		1.000	Length		0.000
LF382	300YKB173	Force	X	-0.01	0.000	Rela	From start	0.000
	Wx_Çalışma - Rüzgar Yükü	GCS	Uniform		1.000	Length		0.000
LF384	300YKB175	Force	X	-0.01	0.000	Rela	From start	0.000
	Wx_Çalışma - Rüzgar Yükü	GCS	Uniform		1.000	Length		0.000
LF385	300YKB176	Force	X	-0.01	0.000	Rela	From start	0.000
	Wx_Çalışma - Rüzgar Yükü	GCS	Uniform		1.000	Length		0.000
LF387	300YKB178	Force	X	-0.01	0.000	Rela	From start	0.000
	Wx_Çalışma - Rüzgar Yükü	GCS	Uniform		1.000	Length		0.000
LF388	300YKB179	Force	X	-0.01	0.000	Rela	From start	0.000
	Wx_Çalışma - Rüzgar Yükü	GCS	Uniform		1.000	Length		0.000
LF390	300YKB181	Force	X	-0.01	0.000	Rela	From start	0.000

Name	Member	Type	Dir	Value - P_1 [kN/m]	Pos x_1	Coor	Orig	Ecc ey [cm]
	Load case	System	Distribution	Value - P_2 [kN/m]	Pos x_2	Loc		Ecc ez [cm]
	Wx_Çalışma - Rüzgar Yükü	GCS	Uniform		1.000	Length		0.000
LF391	300YKB182	Force	X	-0.01	0.000	Rela	From start	0.000
	Wx_Çalışma - Rüzgar Yükü	GCS	Uniform		1.000	Length		0.000
LF393	300YKB184	Force	X	-0.01	0.000	Rela	From start	0.000
	Wx_Çalışma - Rüzgar Yükü	GCS	Uniform		1.000	Length		0.000
LF394	300YKB185	Force	X	-0.01	0.000	Rela	From start	0.000
	Wx_Çalışma - Rüzgar Yükü	GCS	Uniform		1.000	Length		0.000
LF396	300YKB187	Force	X	-0.01	0.000	Rela	From start	0.000
	Wx_Çalışma - Rüzgar Yükü	GCS	Uniform		1.000	Length		0.000
LF397	300YKB188	Force	X	-0.01	0.000	Rela	From start	0.000
	Wx_Çalışma - Rüzgar Yükü	GCS	Uniform		1.000	Length		0.000
LF399	300YKB190	Force	X	-0.01	0.000	Rela	From start	0.000
	Wx_Çalışma - Rüzgar Yükü	GCS	Uniform		1.000	Length		0.000
LF400	300YKB191	Force	X	-0.01	0.000	Rela	From start	0.000
	Wx_Çalışma - Rüzgar Yükü	GCS	Uniform		1.000	Length		0.000
LF402	300YKB193	Force	X	-0.01	0.000	Rela	From start	0.000
	Wx_Çalışma - Rüzgar Yükü	GCS	Uniform		1.000	Length		0.000
LF403	300YKB194	Force	X	-0.01	0.000	Rela	From start	0.000
	Wx_Çalışma - Rüzgar Yükü	GCS	Uniform		1.000	Length		0.000
LF405	300YKB196	Force	X	-0.01	0.000	Rela	From start	0.000
	Wx_Çalışma - Rüzgar Yükü	GCS	Uniform		1.000	Length		0.000
LF406	300YKB197	Force	X	-0.01	0.000	Rela	From start	0.000
	Wx_Çalışma - Rüzgar Yükü	GCS	Uniform		1.000	Length		0.000
LF408	300YKB199	Force	X	-0.01	0.000	Rela	From start	0.000
	Wx_Çalışma - Rüzgar Yükü	GCS	Uniform		1.000	Length		0.000
LF409	300YKB200	Force	X	-0.01	0.000	Rela	From start	0.000
	Wx_Çalışma - Rüzgar Yükü	GCS	Uniform		1.000	Length		0.000
LF411	300YKB202	Force	X	-0.01	0.000	Rela	From start	0.000
	Wx_Çalışma - Rüzgar Yükü	GCS	Uniform		1.000	Length		0.000
LF412	300YKB203	Force	X	-0.01	0.000	Rela	From start	0.000
	Wx_Çalışma - Rüzgar Yükü	GCS	Uniform		1.000	Length		0.000
LF414	300YKB205	Force	X	-0.01	0.000	Rela	From start	0.000
	Wx_Çalışma - Rüzgar Yükü	GCS	Uniform		1.000	Length		0.000
LF415	300YKB206	Force	X	-0.01	0.000	Rela	From start	0.000
	Wx_Çalışma - Rüzgar Yükü	GCS	Uniform		1.000	Length		0.000
LF417	300YKB208	Force	X	-0.01	0.000	Rela	From start	0.000
	Wx_Çalışma - Rüzgar Yükü	GCS	Uniform		1.000	Length		0.000
LF418	300YKB209	Force	X	-0.01	0.000	Rela	From start	0.000
	Wx_Çalışma - Rüzgar Yükü	GCS	Uniform		1.000	Length		0.000
LF420	300YKB211	Force	X	-0.01	0.000	Rela	From start	0.000
	Wx_Çalışma - Rüzgar Yükü	GCS	Uniform		1.000	Length		0.000
LF421	300YKB212	Force	X	-0.01	0.000	Rela	From start	0.000
	Wx_Çalışma - Rüzgar Yükü	GCS	Uniform		1.000	Length		0.000
LF423	300YKB214	Force	X	-0.01	0.000	Rela	From start	0.000
	Wx_Çalışma - Rüzgar Yükü	GCS	Uniform		1.000	Length		0.000
LF424	300YKB215	Force	X	-0.01	0.000	Rela	From start	0.000
	Wx_Çalışma - Rüzgar Yükü	GCS	Uniform		1.000	Length		0.000
LF426	300YKB217	Force	X	-0.01	0.000	Rela	From start	0.000
	Wx_Çalışma - Rüzgar Yükü	GCS	Uniform		1.000	Length		0.000
LF427	300YKB218	Force	X	-0.01	0.000	Rela	From start	0.000
	Wx_Çalışma - Rüzgar Yükü	GCS	Uniform		1.000	Length		0.000
LF429	300YKB220	Force	X	-0.01	0.000	Rela	From start	0.000
	Wx_Çalışma - Rüzgar Yükü	GCS	Uniform		1.000	Length		0.000
LF430	300YKB221	Force	X	-0.01	0.000	Rela	From start	0.000
	Wx_Çalışma - Rüzgar Yükü	GCS	Uniform		1.000	Length		0.000
LF432	300YKB223	Force	X	-0.01	0.000	Rela	From start	0.000
	Wx_Çalışma - Rüzgar Yükü	GCS	Uniform		1.000	Length		0.000
LF433	300YKB224	Force	X	-0.01	0.000	Rela	From start	0.000
	Wx_Çalışma - Rüzgar Yükü	GCS	Uniform		1.000	Length		0.000
LF435	300YKB226	Force	X	-0.01	0.000	Rela	From start	0.000
	Wx_Çalışma - Rüzgar Yükü	GCS	Uniform		1.000	Length		0.000
LF436	300YKB227	Force	X	-0.01	0.000	Rela	From start	0.000
	Wx_Çalışma - Rüzgar Yükü	GCS	Uniform		1.000	Length		0.000
LF438	300YKB229	Force	X	-0.01	0.000	Rela	From start	0.000
	Wx_Çalışma - Rüzgar Yükü	GCS	Uniform		1.000	Length		0.000
LF439	300YKB230	Force	X	-0.01	0.000	Rela	From start	0.000
	Wx_Çalışma - Rüzgar Yükü	GCS	Uniform		1.000	Length		0.000
LF441	300YKB232	Force	X	-0.01	0.000	Rela	From start	0.000
	Wx_Çalışma - Rüzgar Yükü	GCS	Uniform		1.000	Length		0.000
LF442	300YKB233	Force	X	-0.01	0.000	Rela	From start	0.000
	Wx_Çalışma - Rüzgar Yükü	GCS	Uniform		1.000	Length		0.000
LF444	300YKB235	Force	X	-0.01	0.000	Rela	From start	0.000
	Wx_Çalışma - Rüzgar Yükü	GCS	Uniform		1.000	Length		0.000
LF445	300YKB236	Force	X	-0.01	0.000	Rela	From start	0.000

Name	Member	Type	Dir	Value - P_1 [kN/m]	Pos x_1	Coor	Orig	Ecc ey [cm]
	Load case	System	Distribution	Value - P_2 [kN/m]	Pos x_2	Loc		Ecc ez [cm]
	Wx_Çalışma - Rüzgar Yükü	GCS	Uniform		1.000	Length		0.000
LF447	300YKB238	Force	X	-0.01	0.000	Rela	From start	0.000
	Wx_Çalışma - Rüzgar Yükü	GCS	Uniform		1.000	Length		0.000
LF448	300YKB239	Force	X	-0.01	0.000	Rela	From start	0.000
	Wx_Çalışma - Rüzgar Yükü	GCS	Uniform		1.000	Length		0.000
LF450	300YKB241	Force	X	-0.01	0.000	Rela	From start	0.000
	Wx_Çalışma - Rüzgar Yükü	GCS	Uniform		1.000	Length		0.000
LF451	300YKB242	Force	X	-0.01	0.000	Rela	From start	0.000
	Wx_Çalışma - Rüzgar Yükü	GCS	Uniform		1.000	Length		0.000
LF453	300YKB244	Force	X	-0.01	0.000	Rela	From start	0.000
	Wx_Çalışma - Rüzgar Yükü	GCS	Uniform		1.000	Length		0.000
LF454	300YKB245	Force	X	-0.01	0.000	Rela	From start	0.000
	Wx_Çalışma - Rüzgar Yükü	GCS	Uniform		1.000	Length		0.000
LF456	300YKB247	Force	X	-0.01	0.000	Rela	From start	0.000
	Wx_Çalışma - Rüzgar Yükü	GCS	Uniform		1.000	Length		0.000
LF457	300YKB248	Force	X	-0.01	0.000	Rela	From start	0.000
	Wx_Çalışma - Rüzgar Yükü	GCS	Uniform		1.000	Length		0.000
LF459	300YKB250	Force	X	-0.01	0.000	Rela	From start	0.000
	Wx_Çalışma - Rüzgar Yükü	GCS	Uniform		1.000	Length		0.000
LF460	300YKB251	Force	X	-0.01	0.000	Rela	From start	0.000
	Wx_Çalışma - Rüzgar Yükü	GCS	Uniform		1.000	Length		0.000
LF462	300YKB253	Force	X	-0.01	0.000	Rela	From start	0.000
	Wx_Çalışma - Rüzgar Yükü	GCS	Uniform		1.000	Length		0.000
LF463	300YKB254	Force	X	-0.01	0.000	Rela	From start	0.000
	Wx_Çalışma - Rüzgar Yükü	GCS	Uniform		1.000	Length		0.000
LF465	300YKB256	Force	X	-0.01	0.000	Rela	From start	0.000
	Wx_Çalışma - Rüzgar Yükü	GCS	Uniform		1.000	Length		0.000
LF466	300YKB257	Force	X	-0.01	0.000	Rela	From start	0.000
	Wx_Çalışma - Rüzgar Yükü	GCS	Uniform		1.000	Length		0.000
LF468	300YKB259	Force	X	-0.01	0.000	Rela	From start	0.000
	Wx_Çalışma - Rüzgar Yükü	GCS	Uniform		1.000	Length		0.000
LF469	300YKB260	Force	X	-0.01	0.000	Rela	From start	0.000
	Wx_Çalışma - Rüzgar Yükü	GCS	Uniform		1.000	Length		0.000
LF471	300YKB262	Force	X	-0.01	0.000	Rela	From start	0.000
	Wx_Çalışma - Rüzgar Yükü	GCS	Uniform		1.000	Length		0.000
LF472	300YKB263	Force	X	-0.01	0.000	Rela	From start	0.000
	Wx_Çalışma - Rüzgar Yükü	GCS	Uniform		1.000	Length		0.000
LF474	300YKB265	Force	X	-0.01	0.000	Rela	From start	0.000
	Wx_Çalışma - Rüzgar Yükü	GCS	Uniform		1.000	Length		0.000
LF475	300YKB266	Force	X	-0.01	0.000	Rela	From start	0.000
	Wx_Çalışma - Rüzgar Yükü	GCS	Uniform		1.000	Length		0.000
LF477	300YKB268	Force	X	-0.01	0.000	Rela	From start	0.000
	Wx_Çalışma - Rüzgar Yükü	GCS	Uniform		1.000	Length		0.000
LF478	300YKB269	Force	X	-0.01	0.000	Rela	From start	0.000
	Wx_Çalışma - Rüzgar Yükü	GCS	Uniform		1.000	Length		0.000
LF480	300YKB271	Force	X	-0.01	0.000	Rela	From start	0.000
	Wx_Çalışma - Rüzgar Yükü	GCS	Uniform		1.000	Length		0.000
LF481	300YKB272	Force	X	-0.01	0.000	Rela	From start	0.000
	Wx_Çalışma - Rüzgar Yükü	GCS	Uniform		1.000	Length		0.000
LF483	300YKB274	Force	X	-0.01	0.000	Rela	From start	0.000
	Wx_Çalışma - Rüzgar Yükü	GCS	Uniform		1.000	Length		0.000
LF484	300YKB275	Force	X	-0.01	0.000	Rela	From start	0.000
	Wx_Çalışma - Rüzgar Yükü	GCS	Uniform		1.000	Length		0.000
LF486	300YKB277	Force	X	-0.01	0.000	Rela	From start	0.000
	Wx_Çalışma - Rüzgar Yükü	GCS	Uniform		1.000	Length		0.000
LF487	300YKB278	Force	X	-0.01	0.000	Rela	From start	0.000
	Wx_Çalışma - Rüzgar Yükü	GCS	Uniform		1.000	Length		0.000
LF489	300YKB280	Force	X	-0.01	0.000	Rela	From start	0.000
	Wx_Çalışma - Rüzgar Yükü	GCS	Uniform		1.000	Length		0.000
LF490	300YKB281	Force	X	-0.01	0.000	Rela	From start	0.000
	Wx_Çalışma - Rüzgar Yükü	GCS	Uniform		1.000	Length		0.000
LF492	300YKB283	Force	X	-0.01	0.000	Rela	From start	0.000
	Wx_Çalışma - Rüzgar Yükü	GCS	Uniform		1.000	Length		0.000
LF493	300YKB284	Force	X	-0.01	0.000	Rela	From start	0.000
	Wx_Çalışma - Rüzgar Yükü	GCS	Uniform		1.000	Length		0.000
LF495	300YKB286	Force	X	-0.01	0.000	Rela	From start	0.000
	Wx_Çalışma - Rüzgar Yükü	GCS	Uniform		1.000	Length		0.000
LF496	300YKB287	Force	X	-0.01	0.000	Rela	From start	0.000
	Wx_Çalışma - Rüzgar Yükü	GCS	Uniform		1.000	Length		0.000
LF498	300YKB289	Force	X	-0.01	0.000	Rela	From start	0.000
	Wx_Çalışma - Rüzgar Yükü	GCS	Uniform		1.000	Length		0.000
LF499	300YKB290	Force	X	-0.01	0.000	Rela	From start	0.000
	Wx_Çalışma - Rüzgar Yükü	GCS	Uniform		1.000	Length		0.000
LF501	300YKB292	Force	X	-0.01	0.000	Rela	From start	0.000

Name	Member	Type	Dir	Value - P_1 [kN/m]	Pos x_1	Coor	Orig	Ecc ey [cm]
	Load case	System	Distribution	Value - P_2 [kN/m]	Pos x_2	Loc		Ecc ez [cm]
	Wx_Çalışma - Rüzgar Yükü	GCS	Uniform		1.000	Length		0.000
LF502	300YKB293	Force	X	-0.01	0.000	Rela	From start	0.000
	Wx_Çalışma - Rüzgar Yükü	GCS	Uniform		1.000	Length		0.000
LF504	300YKB295	Force	X	-0.01	0.000	Rela	From start	0.000
	Wx_Çalışma - Rüzgar Yükü	GCS	Uniform		1.000	Length		0.000
LF505	300YKB296	Force	X	-0.01	0.000	Rela	From start	0.000
	Wx_Çalışma - Rüzgar Yükü	GCS	Uniform		1.000	Length		0.000
LF507	300YKB298	Force	X	-0.01	0.000	Rela	From start	0.000
	Wx_Çalışma - Rüzgar Yükü	GCS	Uniform		1.000	Length		0.000
LF508	300YKB299	Force	X	-0.01	0.000	Rela	From start	0.000
	Wx_Çalışma - Rüzgar Yükü	GCS	Uniform		1.000	Length		0.000
LF510	300YKB301	Force	X	-0.01	0.000	Rela	From start	0.000
	Wx_Çalışma - Rüzgar Yükü	GCS	Uniform		1.000	Length		0.000
LF511	300YKB302	Force	X	-0.01	0.000	Rela	From start	0.000
	Wx_Çalışma - Rüzgar Yükü	GCS	Uniform		1.000	Length		0.000
LF513	300YKB304	Force	X	-0.01	0.000	Rela	From start	0.000
	Wx_Çalışma - Rüzgar Yükü	GCS	Uniform		1.000	Length		0.000
LF514	300YKB305	Force	X	-0.01	0.000	Rela	From start	0.000
	Wx_Çalışma - Rüzgar Yükü	GCS	Uniform		1.000	Length		0.000
LF516	300YKB307	Force	X	-0.01	0.000	Rela	From start	0.000
	Wx_Çalışma - Rüzgar Yükü	GCS	Uniform		1.000	Length		0.000
LF517	300YKB308	Force	X	-0.01	0.000	Rela	From start	0.000
	Wx_Çalışma - Rüzgar Yükü	GCS	Uniform		1.000	Length		0.000
LF519	300YKB310	Force	X	-0.01	0.000	Rela	From start	0.000
	Wx_Çalışma - Rüzgar Yükü	GCS	Uniform		1.000	Length		0.000
LF520	300YKB311	Force	X	-0.01	0.000	Rela	From start	0.000
	Wx_Çalışma - Rüzgar Yükü	GCS	Uniform		1.000	Length		0.000
LF522	300YKB313	Force	X	-0.01	0.000	Rela	From start	0.000
	Wx_Çalışma - Rüzgar Yükü	GCS	Uniform		1.000	Length		0.000
LF523	300YKB314	Force	X	-0.01	0.000	Rela	From start	0.000
	Wx_Çalışma - Rüzgar Yükü	GCS	Uniform		1.000	Length		0.000
LF525	300YKB316	Force	X	-0.01	0.000	Rela	From start	0.000
	Wx_Çalışma - Rüzgar Yükü	GCS	Uniform		1.000	Length		0.000
LF526	300YKB317	Force	X	-0.01	0.000	Rela	From start	0.000
	Wx_Çalışma - Rüzgar Yükü	GCS	Uniform		1.000	Length		0.000
LF528	300YKB319	Force	X	-0.01	0.000	Rela	From start	0.000
	Wx_Çalışma - Rüzgar Yükü	GCS	Uniform		1.000	Length		0.000
LF529	300YKB320	Force	X	-0.01	0.000	Rela	From start	0.000
	Wx_Çalışma - Rüzgar Yükü	GCS	Uniform		1.000	Length		0.000
LF531	300YKB322	Force	X	-0.01	0.000	Rela	From start	0.000
	Wx_Çalışma - Rüzgar Yükü	GCS	Uniform		1.000	Length		0.000
LF532	300YKB323	Force	X	-0.01	0.000	Rela	From start	0.000
	Wx_Çalışma - Rüzgar Yükü	GCS	Uniform		1.000	Length		0.000
LF534	300YKB325	Force	X	-0.01	0.000	Rela	From start	0.000
	Wx_Çalışma - Rüzgar Yükü	GCS	Uniform		1.000	Length		0.000
LF535	300YKB326	Force	X	-0.01	0.000	Rela	From start	0.000
	Wx_Çalışma - Rüzgar Yükü	GCS	Uniform		1.000	Length		0.000
LF537	300YKB328	Force	X	-0.01	0.000	Rela	From start	0.000
	Wx_Çalışma - Rüzgar Yükü	GCS	Uniform		1.000	Length		0.000
LF538	300YKB329	Force	X	-0.01	0.000	Rela	From start	0.000
	Wx_Çalışma - Rüzgar Yükü	GCS	Uniform		1.000	Length		0.000
LF540	300YKB331	Force	X	-0.01	0.000	Rela	From start	0.000
	Wx_Çalışma - Rüzgar Yükü	GCS	Uniform		1.000	Length		0.000
LF541	300YKB332	Force	X	-0.01	0.000	Rela	From start	0.000
	Wx_Çalışma - Rüzgar Yükü	GCS	Uniform		1.000	Length		0.000
LF543	300YKB334	Force	X	-0.01	0.000	Rela	From start	0.000
	Wx_Çalışma - Rüzgar Yükü	GCS	Uniform		1.000	Length		0.000
LF544	300YKB335	Force	X	-0.01	0.000	Rela	From start	0.000
	Wx_Çalışma - Rüzgar Yükü	GCS	Uniform		1.000	Length		0.000
LF546	300YKB337	Force	X	-0.01	0.000	Rela	From start	0.000
	Wx_Çalışma - Rüzgar Yükü	GCS	Uniform		1.000	Length		0.000
LF547	300YKB338	Force	X	-0.01	0.000	Rela	From start	0.000
	Wx_Çalışma - Rüzgar Yükü	GCS	Uniform		1.000	Length		0.000
LF549	300YKB340	Force	X	-0.01	0.000	Rela	From start	0.000
	Wx_Çalışma - Rüzgar Yükü	GCS	Uniform		1.000	Length		0.000
LF550	300YKB341	Force	X	-0.01	0.000	Rela	From start	0.000
	Wx_Çalışma - Rüzgar Yükü	GCS	Uniform		1.000	Length		0.000
LF552	300YKB343	Force	X	-0.01	0.000	Rela	From start	0.000
	Wx_Çalışma - Rüzgar Yükü	GCS	Uniform		1.000	Length		0.000
LF553	300YKB344	Force	X	-0.01	0.000	Rela	From start	0.000
	Wx_Çalışma - Rüzgar Yükü	GCS	Uniform		1.000	Length		0.000
LF555	300YKB346	Force	X	-0.01	0.000	Rela	From start	0.000
	Wx_Çalışma - Rüzgar Yükü	GCS	Uniform		1.000	Length		0.000
LF556	300YKB347	Force	X	-0.01	0.000	Rela	From start	0.000

Name	Member	Type	Dir	Value - P_1 [kN/m]	Pos x_1	Coor	Orig	Ecc ey [cm]
	Load case	System	Distribution	Value - P_2 [kN/m]	Pos x_2	Loc		Ecc ez [cm]
	Wx_Çalışma - Rüzgar Yükü	GCS	Uniform		1.000	Length		0.000
LF558	300YKB349	Force	X	-0.01	0.000	Rela	From start	0.000
	Wx_Çalışma - Rüzgar Yükü	GCS	Uniform		1.000	Length		0.000
LF559	300YKB350	Force	X	-0.01	0.000	Rela	From start	0.000
	Wx_Çalışma - Rüzgar Yükü	GCS	Uniform		1.000	Length		0.000
LF561	300YKB352	Force	X	-0.01	0.000	Rela	From start	0.000
	Wx_Çalışma - Rüzgar Yükü	GCS	Uniform		1.000	Length		0.000
LF562	300YKB353	Force	X	-0.01	0.000	Rela	From start	0.000
	Wx_Çalışma - Rüzgar Yükü	GCS	Uniform		1.000	Length		0.000
LF564	300YKB355	Force	X	-0.01	0.000	Rela	From start	0.000
	Wx_Çalışma - Rüzgar Yükü	GCS	Uniform		1.000	Length		0.000
LF565	300YKB356	Force	X	-0.01	0.000	Rela	From start	0.000
	Wx_Çalışma - Rüzgar Yükü	GCS	Uniform		1.000	Length		0.000
LF567	300YKB358	Force	X	-0.01	0.000	Rela	From start	0.000
	Wx_Çalışma - Rüzgar Yükü	GCS	Uniform		1.000	Length		0.000
LF568	300YKB359	Force	X	-0.01	0.000	Rela	From start	0.000
	Wx_Çalışma - Rüzgar Yükü	GCS	Uniform		1.000	Length		0.000
LF569	300CKB	Force	X	-0.01	0.000	Rela	From start	0.000
	Wx_Çalışma - Rüzgar Yükü	GCS	Uniform		1.000	Length		0.000
LF570	300CKB1	Force	X	-0.01	0.000	Rela	From start	0.000
	Wx_Çalışma - Rüzgar Yükü	GCS	Uniform		1.000	Length		0.000
LF571	300CKB2	Force	X	-0.01	0.000	Rela	From start	0.000
	Wx_Çalışma - Rüzgar Yükü	GCS	Uniform		1.000	Length		0.000
LF572	300CKB3	Force	X	-0.01	0.000	Rela	From start	0.000
	Wx_Çalışma - Rüzgar Yükü	GCS	Uniform		1.000	Length		0.000
LF573	300CKB4	Force	X	-0.01	0.000	Rela	From start	0.000
	Wx_Çalışma - Rüzgar Yükü	GCS	Uniform		1.000	Length		0.000
LF574	300CKB5	Force	X	-0.01	0.000	Rela	From start	0.000
	Wx_Çalışma - Rüzgar Yükü	GCS	Uniform		1.000	Length		0.000
LF575	300CKB6	Force	X	-0.01	0.000	Rela	From start	0.000
	Wx_Çalışma - Rüzgar Yükü	GCS	Uniform		1.000	Length		0.000
LF576	300CKB7	Force	X	-0.01	0.000	Rela	From start	0.000
	Wx_Çalışma - Rüzgar Yükü	GCS	Uniform		1.000	Length		0.000
LF577	300CKB8	Force	X	-0.01	0.000	Rela	From start	0.000
	Wx_Çalışma - Rüzgar Yükü	GCS	Uniform		1.000	Length		0.000
LF578	300CKB9	Force	X	-0.01	0.000	Rela	From start	0.000
	Wx_Çalışma - Rüzgar Yükü	GCS	Uniform		1.000	Length		0.000
LF579	300CKB10	Force	X	-0.01	0.000	Rela	From start	0.000
	Wx_Çalışma - Rüzgar Yükü	GCS	Uniform		1.000	Length		0.000
LF580	300CKB11	Force	X	-0.01	0.000	Rela	From start	0.000
	Wx_Çalışma - Rüzgar Yükü	GCS	Uniform		1.000	Length		0.000
LF581	300CKB12	Force	X	-0.01	0.000	Rela	From start	0.000
	Wx_Çalışma - Rüzgar Yükü	GCS	Uniform		1.000	Length		0.000
LF582	300CKB13	Force	X	-0.01	0.000	Rela	From start	0.000
	Wx_Çalışma - Rüzgar Yükü	GCS	Uniform		1.000	Length		0.000
LF583	300CKB14	Force	X	-0.01	0.000	Rela	From start	0.000
	Wx_Çalışma - Rüzgar Yükü	GCS	Uniform		1.000	Length		0.000
LF584	300CKB15	Force	X	-0.01	0.000	Rela	From start	0.000
	Wx_Çalışma - Rüzgar Yükü	GCS	Uniform		1.000	Length		0.000
LF585	300CKB16	Force	X	-0.01	0.000	Rela	From start	0.000
	Wx_Çalışma - Rüzgar Yükü	GCS	Uniform		1.000	Length		0.000
LF586	300CKB17	Force	X	-0.01	0.000	Rela	From start	0.000
	Wx_Çalışma - Rüzgar Yükü	GCS	Uniform		1.000	Length		0.000
LF587	300CKB18	Force	X	-0.01	0.000	Rela	From start	0.000
	Wx_Çalışma - Rüzgar Yükü	GCS	Uniform		1.000	Length		0.000
LF588	300CKB19	Force	X	-0.01	0.000	Rela	From start	0.000
	Wx_Çalışma - Rüzgar Yükü	GCS	Uniform		1.000	Length		0.000
LF589	300CKB20	Force	X	-0.01	0.000	Rela	From start	0.000
	Wx_Çalışma - Rüzgar Yükü	GCS	Uniform		1.000	Length		0.000
LF590	300CKB21	Force	X	-0.01	0.000	Rela	From start	0.000
	Wx_Çalışma - Rüzgar Yükü	GCS	Uniform		1.000	Length		0.000
LF591	300FDD6F0	Wind	X	-0.05	0.000	Rela	From start	0.000
	Wx_Max - Rüzgar Yükü	GCS	Uniform	-0.05	1.000	Length		0.000
LF592	300FDD6F2	Wind	X	-0.05	0.000	Rela	From start	0.000
	Wx_Max - Rüzgar Yükü	GCS	Uniform	-0.05	1.000	Length		0.000
LF593	300FDD6F4	Wind	X	-0.05	0.000	Rela	From start	0.000
	Wx_Max - Rüzgar Yükü	GCS	Uniform	-0.05	1.000	Length		0.000
LF594	300FDD6F6	Wind	X	-0.05	0.000	Rela	From start	0.000
	Wx_Max - Rüzgar Yükü	GCS	Uniform	-0.05	1.000	Length		0.000
LF595	300FDD6F8	Wind	X	-0.05	0.000	Rela	From start	0.000
	Wx_Max - Rüzgar Yükü	GCS	Uniform	-0.05	1.000	Length		0.000
LF596	300FDD6F10	Wind	X	-0.05	0.000	Rela	From start	0.000
	Wx_Max - Rüzgar Yükü	GCS	Uniform	-0.05	1.000	Length		0.000
LF597	300FDD6F12	Wind	X	-0.05	0.000	Rela	From start	0.000

Name	Member	Type	Dir	Value - P_1 [kN/m]	Pos x_1	Coor	Orig	Ecc ey [cm]
	Load case	System	Distribution	Value - P_2 [kN/m]	Pos x_2	Loc		Ecc ez [cm]
	Wx_Max - Rüzgar Yükü	GCS	Uniform	-0.05	1.000	Length		0.000
LF598	300FDD6F14	Wind	X	-0.05	0.000	Rela	From start	0.000
	Wx_Max - Rüzgar Yükü	GCS	Uniform	-0.05	1.000	Length		0.000
LF599	300FDD6F16	Wind	X	-0.05	0.000	Rela	From start	0.000
	Wx_Max - Rüzgar Yükü	GCS	Uniform	-0.05	1.000	Length		0.000
LF600	300FDD6F18	Wind	X	-0.05	0.000	Rela	From start	0.000
	Wx_Max - Rüzgar Yükü	GCS	Uniform	-0.05	1.000	Length		0.000
LF601	300FDD6F20	Wind	X	-0.05	0.000	Rela	From start	0.000
	Wx_Max - Rüzgar Yükü	GCS	Uniform	-0.05	1.000	Length		0.000
LF602	300FDD6F22	Wind	X	-0.05	0.000	Rela	From start	0.000
	Wx_Max - Rüzgar Yükü	GCS	Uniform	-0.05	1.000	Length		0.000
LF603	300FDD6F24	Wind	X	-0.05	0.000	Rela	From start	0.000
	Wx_Max - Rüzgar Yükü	GCS	Uniform	-0.05	1.000	Length		0.000
LF604	300FDD6F26	Wind	X	-0.05	0.000	Rela	From start	0.000
	Wx_Max - Rüzgar Yükü	GCS	Uniform	-0.05	1.000	Length		0.000
LF605	300FDD6F28	Wind	X	-0.05	0.000	Rela	From start	0.000
	Wx_Max - Rüzgar Yükü	GCS	Uniform	-0.05	1.000	Length		0.000
LF606	300FDD6F30	Wind	X	-0.05	0.000	Rela	From start	0.000
	Wx_Max - Rüzgar Yükü	GCS	Uniform	-0.05	1.000	Length		0.000
LF607	300FDD6F32	Wind	X	-0.05	0.000	Rela	From start	0.000
	Wx_Max - Rüzgar Yükü	GCS	Uniform	-0.05	1.000	Length		0.000
LF608	300FDD6F34	Wind	X	-0.05	0.000	Rela	From start	0.000
	Wx_Max - Rüzgar Yükü	GCS	Uniform	-0.05	1.000	Length		0.000
LF609	300FDD6F36	Wind	X	-0.05	0.000	Rela	From start	0.000
	Wx_Max - Rüzgar Yükü	GCS	Uniform	-0.05	1.000	Length		0.000
LF610	300FDD6F38	Wind	X	-0.05	0.000	Rela	From start	0.000
	Wx_Max - Rüzgar Yükü	GCS	Uniform	-0.05	1.000	Length		0.000
LF611	300FDD6F40	Wind	X	-0.05	0.000	Rela	From start	0.000
	Wx_Max - Rüzgar Yükü	GCS	Uniform	-0.05	1.000	Length		0.000
LF612	300FDD6F42	Wind	X	-0.05	0.000	Rela	From start	0.000
	Wx_Max - Rüzgar Yükü	GCS	Uniform	-0.05	1.000	Length		0.000
LF613	300FDD6F44	Wind	X	-0.05	0.000	Rela	From start	0.000
	Wx_Max - Rüzgar Yükü	GCS	Uniform	-0.06	1.000	Length		0.000
LF614	300FDD6F46	Wind	X	-0.05	0.000	Rela	From start	0.000
	Wx_Max - Rüzgar Yükü	GCS	Uniform	-0.06	1.000	Length		0.000
LF615	300FDD6F48	Wind	X	-0.05	0.000	Rela	From start	0.000
	Wx_Max - Rüzgar Yükü	GCS	Uniform	-0.06	1.000	Length		0.000
LF616	300FDD6F50	Wind	X	-0.05	0.000	Rela	From start	0.000
	Wx_Max - Rüzgar Yükü	GCS	Uniform	-0.06	1.000	Length		0.000
LF617	300FDD6F52	Wind	X	-0.05	0.000	Rela	From start	0.000
	Wx_Max - Rüzgar Yükü	GCS	Uniform	-0.06	1.000	Length		0.000
LF618	300FDD6F54	Wind	X	-0.05	0.000	Rela	From start	0.000
	Wx_Max - Rüzgar Yükü	GCS	Uniform	-0.06	1.000	Length		0.000
LF619	300FDD6F56	Wind	X	-0.05	0.000	Rela	From start	0.000
	Wx_Max - Rüzgar Yükü	GCS	Uniform	-0.06	1.000	Length		0.000
LF620	300FDD6F58	Wind	X	-0.05	0.000	Rela	From start	0.000
	Wx_Max - Rüzgar Yükü	GCS	Uniform	-0.06	1.000	Length		0.000
LF621	300FDD6F60	Wind	X	-0.05	0.000	Rela	From start	0.000
	Wx_Max - Rüzgar Yükü	GCS	Uniform	-0.06	1.000	Length		0.000
LF622	300FDD6F62	Wind	X	-0.05	0.000	Rela	From start	0.000
	Wx_Max - Rüzgar Yükü	GCS	Uniform	-0.06	1.000	Length		0.000
LF623	300FDD6F64	Wind	X	-0.05	0.000	Rela	From start	0.000
	Wx_Max - Rüzgar Yükü	GCS	Uniform	-0.06	1.000	Length		0.000
LF624	300FDD6F66	Wind	X	-0.06	0.000	Rela	From start	0.000
	Wx_Max - Rüzgar Yükü	GCS	Uniform	-0.06	1.000	Length		0.000
LF625	300FDD6F68	Wind	X	-0.06	0.000	Rela	From start	0.000
	Wx_Max - Rüzgar Yükü	GCS	Uniform	-0.06	1.000	Length		0.000
LF626	300FDD6F70	Wind	X	-0.06	0.000	Rela	From start	0.000
	Wx_Max - Rüzgar Yükü	GCS	Uniform	-0.06	1.000	Length		0.000
LF627	300FDD6F72	Wind	X	-0.06	0.000	Rela	From start	0.000
	Wx_Max - Rüzgar Yükü	GCS	Uniform	-0.06	1.000	Length		0.000
LF628	300FDD6F74	Wind	X	-0.06	0.000	Rela	From start	0.000
	Wx_Max - Rüzgar Yükü	GCS	Uniform	-0.06	1.000	Length		0.000
LF629	300FDD6F76	Wind	X	-0.06	0.000	Rela	From start	0.000
	Wx_Max - Rüzgar Yükü	GCS	Uniform	-0.06	1.000	Length		0.000
LF630	300FDD6F78	Wind	X	-0.06	0.000	Rela	From start	0.000
	Wx_Max - Rüzgar Yükü	GCS	Uniform	-0.06	1.000	Length		0.000
LF631	300FDD6F80	Wind	X	-0.06	0.000	Rela	From start	0.000
	Wx_Max - Rüzgar Yükü	GCS	Uniform	-0.06	1.000	Length		0.000
LF632	300FDD6F82	Wind	X	-0.06	0.000	Rela	From start	0.000
	Wx_Max - Rüzgar Yükü	GCS	Uniform	-0.06	1.000	Length		0.000
LF633	300FDD6F84	Wind	X	-0.06	0.000	Rela	From start	0.000
	Wx_Max - Rüzgar Yükü	GCS	Uniform	-0.06	1.000	Length		0.000
LF634	300FDD6F86	Wind	X	-0.06	0.000	Rela	From start	0.000

Name	Member	Type	Dir	Value - P_1 [kN/m]	Pos x_1	Coor	Orig	Ecc ey [cm]
	Load case	System	Distribution	Value - P_2 [kN/m]	Pos x_2	Loc		Ecc ez [cm]
	Wx_Max - Rüzgar Yükü	GCS	Uniform	-0.06	1.000	Length		0.000
LF635	300FDD6F88	Wind	X	-0.06	0.000	Rela	From start	0.000
	Wx_Max - Rüzgar Yükü	GCS	Uniform	-0.06	1.000	Length		0.000
LF636	300FDD6F90	Wind	X	-0.06	0.000	Rela	From start	0.000
	Wx_Max - Rüzgar Yükü	GCS	Uniform	-0.06	1.000	Length		0.000
LF637	300FDD6F92	Wind	X	-0.06	0.000	Rela	From start	0.000
	Wx_Max - Rüzgar Yükü	GCS	Uniform	-0.06	1.000	Length		0.000
LF638	300FDD6F94	Wind	X	-0.06	0.000	Rela	From start	0.000
	Wx_Max - Rüzgar Yükü	GCS	Uniform	-0.06	1.000	Length		0.000
LF639	300FDD6F96	Wind	X	-0.06	0.000	Rela	From start	0.000
	Wx_Max - Rüzgar Yükü	GCS	Uniform	-0.06	1.000	Length		0.000
LF640	300FDD6F98	Wind	X	-0.06	0.000	Rela	From start	0.000
	Wx_Max - Rüzgar Yükü	GCS	Uniform	-0.06	1.000	Length		0.000
LF641	300FDD6F100	Wind	X	-0.06	0.000	Rela	From start	0.000
	Wx_Max - Rüzgar Yükü	GCS	Uniform	-0.06	1.000	Length		0.000
LF642	300FDD6F102	Wind	X	-0.06	0.000	Rela	From start	0.000
	Wx_Max - Rüzgar Yükü	GCS	Uniform	-0.06	1.000	Length		0.000
LF643	300FDD6F104	Wind	X	-0.06	0.000	Rela	From start	0.000
	Wx_Max - Rüzgar Yükü	GCS	Uniform	-0.06	1.000	Length		0.000
LF644	300FDD6F106	Wind	X	-0.06	0.000	Rela	From start	0.000
	Wx_Max - Rüzgar Yükü	GCS	Uniform	-0.06	1.000	Length		0.000
LF645	300FDD6F108	Wind	X	-0.06	0.000	Rela	From start	0.000
	Wx_Max - Rüzgar Yükü	GCS	Uniform	-0.06	1.000	Length		0.000
LF646	300FDD6F110	Wind	X	-0.06	0.000	Rela	From start	0.000
	Wx_Max - Rüzgar Yükü	GCS	Uniform	-0.06	1.000	Length		0.000
LF647	300FDD6F112	Wind	X	-0.06	0.000	Rela	From start	0.000
	Wx_Max - Rüzgar Yükü	GCS	Uniform	-0.06	1.000	Length		0.000
LF648	300FDD6F114	Wind	X	-0.06	0.000	Rela	From start	0.000
	Wx_Max - Rüzgar Yükü	GCS	Uniform	-0.06	1.000	Length		0.000
LF649	300FDD6F116	Wind	X	-0.06	0.000	Rela	From start	0.000
	Wx_Max - Rüzgar Yükü	GCS	Uniform	-0.06	1.000	Length		0.000
LF650	300FDD6F118	Wind	X	-0.06	0.000	Rela	From start	0.000
	Wx_Max - Rüzgar Yükü	GCS	Uniform	-0.06	1.000	Length		0.000
LF651	300FDD6F120	Wind	X	-0.06	0.000	Rela	From start	0.000
	Wx_Max - Rüzgar Yükü	GCS	Uniform	-0.06	1.000	Length		0.000
LF652	300FDD6F122	Wind	X	-0.06	0.000	Rela	From start	0.000
	Wx_Max - Rüzgar Yükü	GCS	Uniform	-0.06	1.000	Length		0.000
LF653	300FDD6F124	Wind	X	-0.06	0.000	Rela	From start	0.000
	Wx_Max - Rüzgar Yükü	GCS	Uniform	-0.06	1.000	Length		0.000
LF654	300FDD6F126	Wind	X	-0.06	0.000	Rela	From start	0.000
	Wx_Max - Rüzgar Yükü	GCS	Uniform	-0.06	1.000	Length		0.000
LF655	300FDD6F128	Wind	X	-0.06	0.000	Rela	From start	0.000
	Wx_Max - Rüzgar Yükü	GCS	Uniform	-0.06	1.000	Length		0.000
LF656	300FDD6F130	Wind	X	-0.06	0.000	Rela	From start	0.000
	Wx_Max - Rüzgar Yükü	GCS	Uniform	-0.06	1.000	Length		0.000
LF657	300FDD6F132	Wind	X	-0.06	0.000	Rela	From start	0.000
	Wx_Max - Rüzgar Yükü	GCS	Uniform	-0.07	1.000	Length		0.000
LF658	300FDD6F134	Wind	X	-0.06	0.000	Rela	From start	0.000
	Wx_Max - Rüzgar Yükü	GCS	Uniform	-0.07	1.000	Length		0.000
LF659	300FDD6F136	Wind	X	-0.06	0.000	Rela	From start	0.000
	Wx_Max - Rüzgar Yükü	GCS	Uniform	-0.07	1.000	Length		0.000
LF660	300FDD6F138	Wind	X	-0.06	0.000	Rela	From start	0.000
	Wx_Max - Rüzgar Yükü	GCS	Uniform	-0.07	1.000	Length		0.000
LF661	300FDD6F140	Wind	X	-0.06	0.000	Rela	From start	0.000
	Wx_Max - Rüzgar Yükü	GCS	Uniform	-0.07	1.000	Length		0.000
LF662	300FDD6F142	Wind	X	-0.06	0.000	Rela	From start	0.000
	Wx_Max - Rüzgar Yükü	GCS	Uniform	-0.07	1.000	Length		0.000
LF663	300FDD6F144	Wind	X	-0.06	0.000	Rela	From start	0.000
	Wx_Max - Rüzgar Yükü	GCS	Uniform	-0.07	1.000	Length		0.000
LF664	300FDD6F146	Wind	X	-0.06	0.000	Rela	From start	0.000
	Wx_Max - Rüzgar Yükü	GCS	Uniform	-0.07	1.000	Length		0.000
LF665	300FDD6F148	Wind	X	-0.06	0.000	Rela	From start	0.000
	Wx_Max - Rüzgar Yükü	GCS	Uniform	-0.07	1.000	Length		0.000
LF666	300FDD6F150	Wind	X	-0.06	0.000	Rela	From start	0.000
	Wx_Max - Rüzgar Yükü	GCS	Uniform	-0.07	1.000	Length		0.000
LF667	300FDD6F152	Wind	X	-0.06	0.000	Rela	From start	0.000
	Wx_Max - Rüzgar Yükü	GCS	Uniform	-0.07	1.000	Length		0.000
LF668	300FDD6F154	Wind	X	-0.07	0.000	Rela	From start	0.000
	Wx_Max - Rüzgar Yükü	GCS	Uniform	-0.07	1.000	Length		0.000
LF669	300FDD6F156	Wind	X	-0.07	0.000	Rela	From start	0.000
	Wx_Max - Rüzgar Yükü	GCS	Uniform	-0.07	1.000	Length		0.000
LF670	300FDD6F158	Wind	X	-0.07	0.000	Rela	From start	0.000
	Wx_Max - Rüzgar Yükü	GCS	Uniform	-0.07	1.000	Length		0.000
LF671	300FDD6F160	Wind	X	-0.07	0.000	Rela	From start	0.000

Name	Member	Type	Dir	Value - P_1 [kN/m]	Pos x_1	Coor	Orig	Ecc ey [cm]
	Load case	System	Distribution	Value - P_2 [kN/m]	Pos x_2	Loc		Ecc ez [cm]
	Wx_Max - Rüzgar Yükü	GCS	Uniform	-0.07	1.000	Length		0.000
LF672	300FDD6F162	Wind	X	-0.07	0.000	Rela	From start	0.000
	Wx_Max - Rüzgar Yükü	GCS	Uniform	-0.07	1.000	Length		0.000
LF673	300FDD6F164	Wind	X	-0.07	0.000	Rela	From start	0.000
	Wx_Max - Rüzgar Yükü	GCS	Uniform	-0.07	1.000	Length		0.000
LF674	300FDD6F166	Wind	X	-0.07	0.000	Rela	From start	0.000
	Wx_Max - Rüzgar Yükü	GCS	Uniform	-0.07	1.000	Length		0.000
LF675	300FDD6F168	Wind	X	-0.07	0.000	Rela	From start	0.000
	Wx_Max - Rüzgar Yükü	GCS	Uniform	-0.07	1.000	Length		0.000
LF676	300FDD6F170	Wind	X	-0.07	0.000	Rela	From start	0.000
	Wx_Max - Rüzgar Yükü	GCS	Uniform	-0.07	1.000	Length		0.000
LF677	300FDD6F172	Wind	X	-0.07	0.000	Rela	From start	0.000
	Wx_Max - Rüzgar Yükü	GCS	Uniform	-0.07	1.000	Length		0.000
LF678	300FDD6F174	Wind	X	-0.07	0.000	Rela	From start	0.000
	Wx_Max - Rüzgar Yükü	GCS	Uniform	-0.07	1.000	Length		0.000
LF680	300YKB1	Wind	X	-0.05	0.000	Rela	From start	0.000
	Wx_Max - Rüzgar Yükü	GCS	Uniform	-0.05	1.000	Length		0.000
LF681	300YKB2	Wind	X	-0.05	0.000	Rela	From start	0.000
	Wx_Max - Rüzgar Yükü	GCS	Uniform	-0.05	1.000	Length		0.000
LF683	300YKB4	Wind	X	-0.05	0.000	Rela	From start	0.000
	Wx_Max - Rüzgar Yükü	GCS	Uniform	-0.05	1.000	Length		0.000
LF684	300YKB5	Wind	X	-0.05	0.000	Rela	From start	0.000
	Wx_Max - Rüzgar Yükü	GCS	Uniform	-0.05	1.000	Length		0.000
LF686	300YKB7	Wind	X	-0.05	0.000	Rela	From start	0.000
	Wx_Max - Rüzgar Yükü	GCS	Uniform	-0.05	1.000	Length		0.000
LF687	300YKB8	Wind	X	-0.05	0.000	Rela	From start	0.000
	Wx_Max - Rüzgar Yükü	GCS	Uniform	-0.05	1.000	Length		0.000
LF689	300YKB10	Wind	X	-0.05	0.000	Rela	From start	0.000
	Wx_Max - Rüzgar Yükü	GCS	Uniform	-0.05	1.000	Length		0.000
LF690	300YKB11	Wind	X	-0.05	0.000	Rela	From start	0.000
	Wx_Max - Rüzgar Yükü	GCS	Uniform	-0.05	1.000	Length		0.000
LF692	300YKB13	Wind	X	-0.05	0.000	Rela	From start	0.000
	Wx_Max - Rüzgar Yükü	GCS	Uniform	-0.05	1.000	Length		0.000
LF693	300YKB14	Wind	X	-0.05	0.000	Rela	From start	0.000
	Wx_Max - Rüzgar Yükü	GCS	Uniform	-0.05	1.000	Length		0.000
LF695	300YKB16	Wind	X	-0.05	0.000	Rela	From start	0.000
	Wx_Max - Rüzgar Yükü	GCS	Uniform	-0.05	1.000	Length		0.000
LF696	300YKB17	Wind	X	-0.05	0.000	Rela	From start	0.000
	Wx_Max - Rüzgar Yükü	GCS	Uniform	-0.05	1.000	Length		0.000
LF698	300YKB19	Wind	X	-0.05	0.000	Rela	From start	0.000
	Wx_Max - Rüzgar Yükü	GCS	Uniform	-0.05	1.000	Length		0.000
LF699	300YKB20	Wind	X	-0.05	0.000	Rela	From start	0.000
	Wx_Max - Rüzgar Yükü	GCS	Uniform	-0.05	1.000	Length		0.000
LF701	300YKB22	Wind	X	-0.05	0.000	Rela	From start	0.000
	Wx_Max - Rüzgar Yükü	GCS	Uniform	-0.05	1.000	Length		0.000
LF702	300YKB23	Wind	X	-0.05	0.000	Rela	From start	0.000
	Wx_Max - Rüzgar Yükü	GCS	Uniform	-0.05	1.000	Length		0.000
LF704	300YKB25	Wind	X	-0.05	0.000	Rela	From start	0.000
	Wx_Max - Rüzgar Yükü	GCS	Uniform	-0.05	1.000	Length		0.000
LF705	300YKB26	Wind	X	-0.05	0.000	Rela	From start	0.000
	Wx_Max - Rüzgar Yükü	GCS	Uniform	-0.05	1.000	Length		0.000
LF707	300YKB28	Wind	X	-0.05	0.000	Rela	From start	0.000
	Wx_Max - Rüzgar Yükü	GCS	Uniform	-0.05	1.000	Length		0.000
LF708	300YKB29	Wind	X	-0.05	0.000	Rela	From start	0.000
	Wx_Max - Rüzgar Yükü	GCS	Uniform	-0.05	1.000	Length		0.000
LF710	300YKB31	Wind	X	-0.05	0.000	Rela	From start	0.000
	Wx_Max - Rüzgar Yükü	GCS	Uniform	-0.05	1.000	Length		0.000
LF711	300YKB32	Wind	X	-0.05	0.000	Rela	From start	0.000
	Wx_Max - Rüzgar Yükü	GCS	Uniform	-0.05	1.000	Length		0.000
LF713	300YKB34	Wind	X	-0.05	0.000	Rela	From start	0.000
	Wx_Max - Rüzgar Yükü	GCS	Uniform	-0.05	1.000	Length		0.000
LF714	300YKB35	Wind	X	-0.05	0.000	Rela	From start	0.000
	Wx_Max - Rüzgar Yükü	GCS	Uniform	-0.05	1.000	Length		0.000
LF716	300YKB37	Wind	X	-0.05	0.000	Rela	From start	0.000
	Wx_Max - Rüzgar Yükü	GCS	Uniform	-0.05	1.000	Length		0.000
LF717	300YKB38	Wind	X	-0.05	0.000	Rela	From start	0.000
	Wx_Max - Rüzgar Yükü	GCS	Uniform	-0.05	1.000	Length		0.000
LF719	300YKB40	Wind	X	-0.05	0.000	Rela	From start	0.000
	Wx_Max - Rüzgar Yükü	GCS	Uniform	-0.05	1.000	Length		0.000
LF720	300YKB41	Wind	X	-0.05	0.000	Rela	From start	0.000
	Wx_Max - Rüzgar Yükü	GCS	Uniform	-0.05	1.000	Length		0.000
LF722	300YKB43	Wind	X	-0.05	0.000	Rela	From start	0.000
	Wx_Max - Rüzgar Yükü	GCS	Uniform	-0.05	1.000	Length		0.000
LF723	300YKB44	Wind	X	-0.05	0.000	Rela	From start	0.000

Name	Member	Type	Dir	Value - P_1 [kN/m]	Pos x_1	Coor	Orig	Ecc ey [cm]
	Load case	System	Distribution	Value - P_2 [kN/m]	Pos x_2	Loc		Ecc ez [cm]
	Wx_Max - Rüzgar Yükü	GCS	Uniform	-0.05	1.000	Length		0.000
LF725	300YKB46	Wind	X	-0.05	0.000	Rela	From start	0.000
	Wx_Max - Rüzgar Yükü	GCS	Uniform	-0.05	1.000	Length		0.000
LF726	300YKB47	Wind	X	-0.05	0.000	Rela	From start	0.000
	Wx_Max - Rüzgar Yükü	GCS	Uniform	-0.05	1.000	Length		0.000
LF728	300YKB49	Wind	X	-0.05	0.000	Rela	From start	0.000
	Wx_Max - Rüzgar Yükü	GCS	Uniform	-0.05	1.000	Length		0.000
LF729	300YKB50	Wind	X	-0.05	0.000	Rela	From start	0.000
	Wx_Max - Rüzgar Yükü	GCS	Uniform	-0.05	1.000	Length		0.000
LF731	300YKB52	Wind	X	-0.05	0.000	Rela	From start	0.000
	Wx_Max - Rüzgar Yükü	GCS	Uniform	-0.05	1.000	Length		0.000
LF732	300YKB53	Wind	X	-0.05	0.000	Rela	From start	0.000
	Wx_Max - Rüzgar Yükü	GCS	Uniform	-0.05	1.000	Length		0.000
LF734	300YKB55	Wind	X	-0.05	0.000	Rela	From start	0.000
	Wx_Max - Rüzgar Yükü	GCS	Uniform	-0.05	1.000	Length		0.000
LF735	300YKB56	Wind	X	-0.05	0.000	Rela	From start	0.000
	Wx_Max - Rüzgar Yükü	GCS	Uniform	-0.05	1.000	Length		0.000
LF737	300YKB58	Wind	X	-0.05	0.000	Rela	From start	0.000
	Wx_Max - Rüzgar Yükü	GCS	Uniform	-0.05	1.000	Length		0.000
LF738	300YKB59	Wind	X	-0.05	0.000	Rela	From start	0.000
	Wx_Max - Rüzgar Yükü	GCS	Uniform	-0.05	1.000	Length		0.000
LF740	300YKB61	Wind	X	-0.05	0.000	Rela	From start	0.000
	Wx_Max - Rüzgar Yükü	GCS	Uniform	-0.05	1.000	Length		0.000
LF741	300YKB62	Wind	X	-0.05	0.000	Rela	From start	0.000
	Wx_Max - Rüzgar Yükü	GCS	Uniform	-0.05	1.000	Length		0.000
LF743	300YKB64	Wind	X	-0.05	0.000	Rela	From start	0.000
	Wx_Max - Rüzgar Yükü	GCS	Uniform	-0.05	1.000	Length		0.000
LF744	300YKB65	Wind	X	-0.05	0.000	Rela	From start	0.000
	Wx_Max - Rüzgar Yükü	GCS	Uniform	-0.05	1.000	Length		0.000
LF746	300YKB67	Wind	X	-0.05	0.000	Rela	From start	0.000
	Wx_Max - Rüzgar Yükü	GCS	Uniform	-0.05	1.000	Length		0.000
LF747	300YKB68	Wind	X	-0.05	0.000	Rela	From start	0.000
	Wx_Max - Rüzgar Yükü	GCS	Uniform	-0.05	1.000	Length		0.000
LF749	300YKB70	Wind	X	-0.05	0.000	Rela	From start	0.000
	Wx_Max - Rüzgar Yükü	GCS	Uniform	-0.05	1.000	Length		0.000
LF750	300YKB71	Wind	X	-0.05	0.000	Rela	From start	0.000
	Wx_Max - Rüzgar Yükü	GCS	Uniform	-0.05	1.000	Length		0.000
LF752	300YKB73	Wind	X	-0.05	0.000	Rela	From start	0.000
	Wx_Max - Rüzgar Yükü	GCS	Uniform	-0.05	1.000	Length		0.000
LF753	300YKB74	Wind	X	-0.05	0.000	Rela	From start	0.000
	Wx_Max - Rüzgar Yükü	GCS	Uniform	-0.05	1.000	Length		0.000
LF755	300YKB76	Wind	X	-0.05	0.000	Rela	From start	0.000
	Wx_Max - Rüzgar Yükü	GCS	Uniform	-0.05	1.000	Length		0.000
LF756	300YKB77	Wind	X	-0.05	0.000	Rela	From start	0.000
	Wx_Max - Rüzgar Yükü	GCS	Uniform	-0.05	1.000	Length		0.000
LF758	300YKB79	Wind	X	-0.05	0.000	Rela	From start	0.000
	Wx_Max - Rüzgar Yükü	GCS	Uniform	-0.05	1.000	Length		0.000
LF759	300YKB80	Wind	X	-0.05	0.000	Rela	From start	0.000
	Wx_Max - Rüzgar Yükü	GCS	Uniform	-0.05	1.000	Length		0.000
LF761	300YKB82	Wind	X	-0.05	0.000	Rela	From start	0.000
	Wx_Max - Rüzgar Yükü	GCS	Uniform	-0.05	1.000	Length		0.000
LF762	300YKB83	Wind	X	-0.05	0.000	Rela	From start	0.000
	Wx_Max - Rüzgar Yükü	GCS	Uniform	-0.05	1.000	Length		0.000
LF764	300YKB85	Wind	X	-0.05	0.000	Rela	From start	0.000
	Wx_Max - Rüzgar Yükü	GCS	Uniform	-0.05	1.000	Length		0.000
LF765	300YKB86	Wind	X	-0.05	0.000	Rela	From start	0.000
	Wx_Max - Rüzgar Yükü	GCS	Uniform	-0.05	1.000	Length		0.000
LF767	300YKB88	Wind	X	-0.05	0.000	Rela	From start	0.000
	Wx_Max - Rüzgar Yükü	GCS	Uniform	-0.05	1.000	Length		0.000
LF768	300YKB89	Wind	X	-0.05	0.000	Rela	From start	0.000
	Wx_Max - Rüzgar Yükü	GCS	Uniform	-0.05	1.000	Length		0.000
LF770	300YKB91	Wind	X	-0.06	0.000	Rela	From start	0.000
	Wx_Max - Rüzgar Yükü	GCS	Uniform	-0.06	1.000	Length		0.000
LF771	300YKB92	Wind	X	-0.06	0.000	Rela	From start	0.000
	Wx_Max - Rüzgar Yükü	GCS	Uniform	-0.06	1.000	Length		0.000
LF773	300YKB94	Wind	X	-0.06	0.000	Rela	From start	0.000
	Wx_Max - Rüzgar Yükü	GCS	Uniform	-0.06	1.000	Length		0.000
LF774	300YKB95	Wind	X	-0.06	0.000	Rela	From start	0.000
	Wx_Max - Rüzgar Yükü	GCS	Uniform	-0.06	1.000	Length		0.000
LF776	300YKB97	Wind	X	-0.06	0.000	Rela	From start	0.000
	Wx_Max - Rüzgar Yükü	GCS	Uniform	-0.06	1.000	Length		0.000
LF777	300YKB98	Wind	X	-0.06	0.000	Rela	From start	0.000
	Wx_Max - Rüzgar Yükü	GCS	Uniform	-0.06	1.000	Length		0.000
LF779	300YKB100	Wind	X	-0.06	0.000	Rela	From start	0.000

Name	Member	Type	Dir	Value - P_1 [kN/m]	Pos x_1	Coor	Orig	Ecc ey [cm]
	Load case	System	Distribution	Value - P_2 [kN/m]	Pos x_2	Loc		Ecc ez [cm]
	Wx_Max - Rüzgar Yükü	GCS	Uniform	-0.06	1.000	Length		0.000
LF780	300YKB101	Wind	X	-0.06	0.000	Rela	From start	0.000
	Wx_Max - Rüzgar Yükü	GCS	Uniform	-0.06	1.000	Length		0.000
LF782	300YKB103	Wind	X	-0.06	0.000	Rela	From start	0.000
	Wx_Max - Rüzgar Yükü	GCS	Uniform	-0.06	1.000	Length		0.000
LF783	300YKB104	Wind	X	-0.06	0.000	Rela	From start	0.000
	Wx_Max - Rüzgar Yükü	GCS	Uniform	-0.06	1.000	Length		0.000
LF785	300YKB106	Wind	X	-0.06	0.000	Rela	From start	0.000
	Wx_Max - Rüzgar Yükü	GCS	Uniform	-0.06	1.000	Length		0.000
LF786	300YKB107	Wind	X	-0.06	0.000	Rela	From start	0.000
	Wx_Max - Rüzgar Yükü	GCS	Uniform	-0.06	1.000	Length		0.000
LF788	300YKB109	Wind	X	-0.06	0.000	Rela	From start	0.000
	Wx_Max - Rüzgar Yükü	GCS	Uniform	-0.06	1.000	Length		0.000
LF789	300YKB110	Wind	X	-0.06	0.000	Rela	From start	0.000
	Wx_Max - Rüzgar Yükü	GCS	Uniform	-0.06	1.000	Length		0.000
LF791	300YKB112	Wind	X	-0.06	0.000	Rela	From start	0.000
	Wx_Max - Rüzgar Yükü	GCS	Uniform	-0.06	1.000	Length		0.000
LF792	300YKB113	Wind	X	-0.06	0.000	Rela	From start	0.000
	Wx_Max - Rüzgar Yükü	GCS	Uniform	-0.06	1.000	Length		0.000
LF794	300YKB115	Wind	X	-0.06	0.000	Rela	From start	0.000
	Wx_Max - Rüzgar Yükü	GCS	Uniform	-0.06	1.000	Length		0.000
LF795	300YKB116	Wind	X	-0.06	0.000	Rela	From start	0.000
	Wx_Max - Rüzgar Yükü	GCS	Uniform	-0.06	1.000	Length		0.000
LF797	300YKB118	Wind	X	-0.06	0.000	Rela	From start	0.000
	Wx_Max - Rüzgar Yükü	GCS	Uniform	-0.06	1.000	Length		0.000
LF798	300YKB119	Wind	X	-0.06	0.000	Rela	From start	0.000
	Wx_Max - Rüzgar Yükü	GCS	Uniform	-0.06	1.000	Length		0.000
LF800	300YKB121	Wind	X	-0.06	0.000	Rela	From start	0.000
	Wx_Max - Rüzgar Yükü	GCS	Uniform	-0.06	1.000	Length		0.000
LF801	300YKB122	Wind	X	-0.06	0.000	Rela	From start	0.000
	Wx_Max - Rüzgar Yükü	GCS	Uniform	-0.06	1.000	Length		0.000
LF803	300YKB124	Wind	X	-0.06	0.000	Rela	From start	0.000
	Wx_Max - Rüzgar Yükü	GCS	Uniform	-0.06	1.000	Length		0.000
LF804	300YKB125	Wind	X	-0.06	0.000	Rela	From start	0.000
	Wx_Max - Rüzgar Yükü	GCS	Uniform	-0.06	1.000	Length		0.000
LF806	300YKB127	Wind	X	-0.06	0.000	Rela	From start	0.000
	Wx_Max - Rüzgar Yükü	GCS	Uniform	-0.06	1.000	Length		0.000
LF807	300YKB128	Wind	X	-0.06	0.000	Rela	From start	0.000
	Wx_Max - Rüzgar Yükü	GCS	Uniform	-0.06	1.000	Length		0.000
LF809	300YKB130	Wind	X	-0.06	0.000	Rela	From start	0.000
	Wx_Max - Rüzgar Yükü	GCS	Uniform	-0.06	1.000	Length		0.000
LF810	300YKB131	Wind	X	-0.06	0.000	Rela	From start	0.000
	Wx_Max - Rüzgar Yükü	GCS	Uniform	-0.06	1.000	Length		0.000
LF812	300YKB133	Wind	X	-0.06	0.000	Rela	From start	0.000
	Wx_Max - Rüzgar Yükü	GCS	Uniform	-0.06	1.000	Length		0.000
LF813	300YKB134	Wind	X	-0.06	0.000	Rela	From start	0.000
	Wx_Max - Rüzgar Yükü	GCS	Uniform	-0.06	1.000	Length		0.000
LF815	300YKB136	Wind	X	-0.06	0.000	Rela	From start	0.000
	Wx_Max - Rüzgar Yükü	GCS	Uniform	-0.06	1.000	Length		0.000
LF816	300YKB137	Wind	X	-0.06	0.000	Rela	From start	0.000
	Wx_Max - Rüzgar Yükü	GCS	Uniform	-0.06	1.000	Length		0.000
LF818	300YKB139	Wind	X	-0.06	0.000	Rela	From start	0.000
	Wx_Max - Rüzgar Yükü	GCS	Uniform	-0.06	1.000	Length		0.000
LF819	300YKB140	Wind	X	-0.06	0.000	Rela	From start	0.000
	Wx_Max - Rüzgar Yükü	GCS	Uniform	-0.06	1.000	Length		0.000
LF821	300YKB142	Wind	X	-0.06	0.000	Rela	From start	0.000
	Wx_Max - Rüzgar Yükü	GCS	Uniform	-0.06	1.000	Length		0.000
LF822	300YKB143	Wind	X	-0.06	0.000	Rela	From start	0.000
	Wx_Max - Rüzgar Yükü	GCS	Uniform	-0.06	1.000	Length		0.000
LF824	300YKB145	Wind	X	-0.06	0.000	Rela	From start	0.000
	Wx_Max - Rüzgar Yükü	GCS	Uniform	-0.06	1.000	Length		0.000
LF825	300YKB146	Wind	X	-0.06	0.000	Rela	From start	0.000
	Wx_Max - Rüzgar Yükü	GCS	Uniform	-0.06	1.000	Length		0.000
LF827	300YKB148	Wind	X	-0.06	0.000	Rela	From start	0.000
	Wx_Max - Rüzgar Yükü	GCS	Uniform	-0.06	1.000	Length		0.000
LF828	300YKB149	Wind	X	-0.06	0.000	Rela	From start	0.000
	Wx_Max - Rüzgar Yükü	GCS	Uniform	-0.06	1.000	Length		0.000
LF830	300YKB151	Wind	X	-0.06	0.000	Rela	From start	0.000
	Wx_Max - Rüzgar Yükü	GCS	Uniform	-0.06	1.000	Length		0.000
LF831	300YKB152	Wind	X	-0.06	0.000	Rela	From start	0.000
	Wx_Max - Rüzgar Yükü	GCS	Uniform	-0.06	1.000	Length		0.000
LF833	300YKB154	Wind	X	-0.06	0.000	Rela	From start	0.000
	Wx_Max - Rüzgar Yükü	GCS	Uniform	-0.06	1.000	Length		0.000
LF834	300YKB155	Wind	X	-0.06	0.000	Rela	From start	0.000

Name	Member	Type	Dir	Value - P_1 [kN/m]	Pos x_1	Coor	Orig	Ecc ey [cm]
	Load case	System	Distribution	Value - P_2 [kN/m]	Pos x_2	Loc		Ecc ez [cm]
	Wx_Max - Rüzgar Yükü	GCS	Uniform	-0.06	1.000	Length		0.000
LF836	300YKB157	Wind	X	-0.06	0.000	Rela	From start	0.000
	Wx_Max - Rüzgar Yükü	GCS	Uniform	-0.06	1.000	Length		0.000
LF837	300YKB158	Wind	X	-0.06	0.000	Rela	From start	0.000
	Wx_Max - Rüzgar Yükü	GCS	Uniform	-0.06	1.000	Length		0.000
LF839	300YKB160	Wind	X	-0.06	0.000	Rela	From start	0.000
	Wx_Max - Rüzgar Yükü	GCS	Uniform	-0.06	1.000	Length		0.000
LF840	300YKB161	Wind	X	-0.06	0.000	Rela	From start	0.000
	Wx_Max - Rüzgar Yükü	GCS	Uniform	-0.06	1.000	Length		0.000
LF842	300YKB163	Wind	X	-0.06	0.000	Rela	From start	0.000
	Wx_Max - Rüzgar Yükü	GCS	Uniform	-0.06	1.000	Length		0.000
LF843	300YKB164	Wind	X	-0.06	0.000	Rela	From start	0.000
	Wx_Max - Rüzgar Yükü	GCS	Uniform	-0.06	1.000	Length		0.000
LF845	300YKB166	Wind	X	-0.06	0.000	Rela	From start	0.000
	Wx_Max - Rüzgar Yükü	GCS	Uniform	-0.06	1.000	Length		0.000
LF846	300YKB167	Wind	X	-0.06	0.000	Rela	From start	0.000
	Wx_Max - Rüzgar Yükü	GCS	Uniform	-0.06	1.000	Length		0.000
LF848	300YKB169	Wind	X	-0.06	0.000	Rela	From start	0.000
	Wx_Max - Rüzgar Yükü	GCS	Uniform	-0.06	1.000	Length		0.000
LF849	300YKB170	Wind	X	-0.06	0.000	Rela	From start	0.000
	Wx_Max - Rüzgar Yükü	GCS	Uniform	-0.06	1.000	Length		0.000
LF851	300YKB172	Wind	X	-0.06	0.000	Rela	From start	0.000
	Wx_Max - Rüzgar Yükü	GCS	Uniform	-0.06	1.000	Length		0.000
LF852	300YKB173	Wind	X	-0.06	0.000	Rela	From start	0.000
	Wx_Max - Rüzgar Yükü	GCS	Uniform	-0.06	1.000	Length		0.000
LF854	300YKB175	Wind	X	-0.06	0.000	Rela	From start	0.000
	Wx_Max - Rüzgar Yükü	GCS	Uniform	-0.06	1.000	Length		0.000
LF855	300YKB176	Wind	X	-0.06	0.000	Rela	From start	0.000
	Wx_Max - Rüzgar Yükü	GCS	Uniform	-0.06	1.000	Length		0.000
LF857	300YKB178	Wind	X	-0.06	0.000	Rela	From start	0.000
	Wx_Max - Rüzgar Yükü	GCS	Uniform	-0.06	1.000	Length		0.000
LF858	300YKB179	Wind	X	-0.06	0.000	Rela	From start	0.000
	Wx_Max - Rüzgar Yükü	GCS	Uniform	-0.06	1.000	Length		0.000
LF860	300YKB181	Wind	X	-0.06	0.000	Rela	From start	0.000
	Wx_Max - Rüzgar Yükü	GCS	Uniform	-0.06	1.000	Length		0.000
LF861	300YKB182	Wind	X	-0.06	0.000	Rela	From start	0.000
	Wx_Max - Rüzgar Yükü	GCS	Uniform	-0.06	1.000	Length		0.000
LF863	300YKB184	Wind	X	-0.06	0.000	Rela	From start	0.000
	Wx_Max - Rüzgar Yükü	GCS	Uniform	-0.06	1.000	Length		0.000
LF864	300YKB185	Wind	X	-0.06	0.000	Rela	From start	0.000
	Wx_Max - Rüzgar Yükü	GCS	Uniform	-0.06	1.000	Length		0.000
LF866	300YKB187	Wind	X	-0.06	0.000	Rela	From start	0.000
	Wx_Max - Rüzgar Yükü	GCS	Uniform	-0.06	1.000	Length		0.000
LF867	300YKB188	Wind	X	-0.06	0.000	Rela	From start	0.000
	Wx_Max - Rüzgar Yükü	GCS	Uniform	-0.06	1.000	Length		0.000
LF869	300YKB190	Wind	X	-0.06	0.000	Rela	From start	0.000
	Wx_Max - Rüzgar Yükü	GCS	Uniform	-0.06	1.000	Length		0.000
LF870	300YKB191	Wind	X	-0.06	0.000	Rela	From start	0.000
	Wx_Max - Rüzgar Yükü	GCS	Uniform	-0.06	1.000	Length		0.000
LF872	300YKB193	Wind	X	-0.06	0.000	Rela	From start	0.000
	Wx_Max - Rüzgar Yükü	GCS	Uniform	-0.06	1.000	Length		0.000
LF873	300YKB194	Wind	X	-0.06	0.000	Rela	From start	0.000
	Wx_Max - Rüzgar Yükü	GCS	Uniform	-0.06	1.000	Length		0.000
LF875	300YKB196	Wind	X	-0.06	0.000	Rela	From start	0.000
	Wx_Max - Rüzgar Yükü	GCS	Uniform	-0.06	1.000	Length		0.000
LF876	300YKB197	Wind	X	-0.06	0.000	Rela	From start	0.000
	Wx_Max - Rüzgar Yükü	GCS	Uniform	-0.06	1.000	Length		0.000
LF878	300YKB199	Wind	X	-0.06	0.000	Rela	From start	0.000
	Wx_Max - Rüzgar Yükü	GCS	Uniform	-0.06	1.000	Length		0.000
LF879	300YKB200	Wind	X	-0.06	0.000	Rela	From start	0.000
	Wx_Max - Rüzgar Yükü	GCS	Uniform	-0.06	1.000	Length		0.000
LF881	300YKB202	Wind	X	-0.06	0.000	Rela	From start	0.000
	Wx_Max - Rüzgar Yükü	GCS	Uniform	-0.06	1.000	Length		0.000
LF882	300YKB203	Wind	X	-0.06	0.000	Rela	From start	0.000
	Wx_Max - Rüzgar Yükü	GCS	Uniform	-0.06	1.000	Length		0.000
LF884	300YKB205	Wind	X	-0.06	0.000	Rela	From start	0.000
	Wx_Max - Rüzgar Yükü	GCS	Uniform	-0.06	1.000	Length		0.000
LF885	300YKB206	Wind	X	-0.06	0.000	Rela	From start	0.000
	Wx_Max - Rüzgar Yükü	GCS	Uniform	-0.06	1.000	Length		0.000
LF887	300YKB208	Wind	X	-0.06	0.000	Rela	From start	0.000
	Wx_Max - Rüzgar Yükü	GCS	Uniform	-0.06	1.000	Length		0.000
LF888	300YKB209	Wind	X	-0.06	0.000	Rela	From start	0.000
	Wx_Max - Rüzgar Yükü	GCS	Uniform	-0.06	1.000	Length		0.000
LF890	300YKB211	Wind	X	-0.06	0.000	Rela	From start	0.000

Name	Member	Type	Dir	Value - P_1 [kN/m]	Pos x_1	Coor	Orig	Ecc ey [cm]
	Load case	System	Distribution	Value - P_2 [kN/m]	Pos x_2	Loc		Ecc ez [cm]
	Wx_Max - Rüzgar Yükü	GCS	Uniform	-0.06	1.000	Length		0.000
LF891	300YKB212	Wind	X	-0.06	0.000	Rela	From start	0.000
	Wx_Max - Rüzgar Yükü	GCS	Uniform	-0.06	1.000	Length		0.000
LF893	300YKB214	Wind	X	-0.06	0.000	Rela	From start	0.000
	Wx_Max - Rüzgar Yükü	GCS	Uniform	-0.06	1.000	Length		0.000
LF894	300YKB215	Wind	X	-0.06	0.000	Rela	From start	0.000
	Wx_Max - Rüzgar Yükü	GCS	Uniform	-0.06	1.000	Length		0.000
LF896	300YKB217	Wind	X	-0.06	0.000	Rela	From start	0.000
	Wx_Max - Rüzgar Yükü	GCS	Uniform	-0.06	1.000	Length		0.000
LF897	300YKB218	Wind	X	-0.06	0.000	Rela	From start	0.000
	Wx_Max - Rüzgar Yükü	GCS	Uniform	-0.06	1.000	Length		0.000
LF899	300YKB220	Wind	X	-0.06	0.000	Rela	From start	0.000
	Wx_Max - Rüzgar Yükü	GCS	Uniform	-0.06	1.000	Length		0.000
LF900	300YKB221	Wind	X	-0.06	0.000	Rela	From start	0.000
	Wx_Max - Rüzgar Yükü	GCS	Uniform	-0.06	1.000	Length		0.000
LF902	300YKB223	Wind	X	-0.06	0.000	Rela	From start	0.000
	Wx_Max - Rüzgar Yükü	GCS	Uniform	-0.06	1.000	Length		0.000
LF903	300YKB224	Wind	X	-0.06	0.000	Rela	From start	0.000
	Wx_Max - Rüzgar Yükü	GCS	Uniform	-0.06	1.000	Length		0.000
LF905	300YKB226	Wind	X	-0.06	0.000	Rela	From start	0.000
	Wx_Max - Rüzgar Yükü	GCS	Uniform	-0.06	1.000	Length		0.000
LF906	300YKB227	Wind	X	-0.06	0.000	Rela	From start	0.000
	Wx_Max - Rüzgar Yükü	GCS	Uniform	-0.06	1.000	Length		0.000
LF908	300YKB229	Wind	X	-0.06	0.000	Rela	From start	0.000
	Wx_Max - Rüzgar Yükü	GCS	Uniform	-0.06	1.000	Length		0.000
LF909	300YKB230	Wind	X	-0.06	0.000	Rela	From start	0.000
	Wx_Max - Rüzgar Yükü	GCS	Uniform	-0.06	1.000	Length		0.000
LF911	300YKB232	Wind	X	-0.06	0.000	Rela	From start	0.000
	Wx_Max - Rüzgar Yükü	GCS	Uniform	-0.06	1.000	Length		0.000
LF912	300YKB233	Wind	X	-0.06	0.000	Rela	From start	0.000
	Wx_Max - Rüzgar Yükü	GCS	Uniform	-0.06	1.000	Length		0.000
LF914	300YKB235	Wind	X	-0.06	0.000	Rela	From start	0.000
	Wx_Max - Rüzgar Yükü	GCS	Uniform	-0.06	1.000	Length		0.000
LF915	300YKB236	Wind	X	-0.06	0.000	Rela	From start	0.000
	Wx_Max - Rüzgar Yükü	GCS	Uniform	-0.06	1.000	Length		0.000
LF917	300YKB238	Wind	X	-0.06	0.000	Rela	From start	0.000
	Wx_Max - Rüzgar Yükü	GCS	Uniform	-0.06	1.000	Length		0.000
LF918	300YKB239	Wind	X	-0.06	0.000	Rela	From start	0.000
	Wx_Max - Rüzgar Yükü	GCS	Uniform	-0.06	1.000	Length		0.000
LF920	300YKB241	Wind	X	-0.06	0.000	Rela	From start	0.000
	Wx_Max - Rüzgar Yükü	GCS	Uniform	-0.06	1.000	Length		0.000
LF921	300YKB242	Wind	X	-0.06	0.000	Rela	From start	0.000
	Wx_Max - Rüzgar Yükü	GCS	Uniform	-0.06	1.000	Length		0.000
LF923	300YKB244	Wind	X	-0.06	0.000	Rela	From start	0.000
	Wx_Max - Rüzgar Yükü	GCS	Uniform	-0.06	1.000	Length		0.000
LF924	300YKB245	Wind	X	-0.06	0.000	Rela	From start	0.000
	Wx_Max - Rüzgar Yükü	GCS	Uniform	-0.06	1.000	Length		0.000
LF926	300YKB247	Wind	X	-0.06	0.000	Rela	From start	0.000
	Wx_Max - Rüzgar Yükü	GCS	Uniform	-0.06	1.000	Length		0.000
LF927	300YKB248	Wind	X	-0.06	0.000	Rela	From start	0.000
	Wx_Max - Rüzgar Yükü	GCS	Uniform	-0.06	1.000	Length		0.000
LF929	300YKB250	Wind	X	-0.06	0.000	Rela	From start	0.000
	Wx_Max - Rüzgar Yükü	GCS	Uniform	-0.06	1.000	Length		0.000
LF930	300YKB251	Wind	X	-0.06	0.000	Rela	From start	0.000
	Wx_Max - Rüzgar Yükü	GCS	Uniform	-0.06	1.000	Length		0.000
LF932	300YKB253	Wind	X	-0.06	0.000	Rela	From start	0.000
	Wx_Max - Rüzgar Yükü	GCS	Uniform	-0.06	1.000	Length		0.000
LF933	300YKB254	Wind	X	-0.06	0.000	Rela	From start	0.000
	Wx_Max - Rüzgar Yükü	GCS	Uniform	-0.06	1.000	Length		0.000
LF935	300YKB256	Wind	X	-0.06	0.000	Rela	From start	0.000
	Wx_Max - Rüzgar Yükü	GCS	Uniform	-0.06	1.000	Length		0.000
LF936	300YKB257	Wind	X	-0.06	0.000	Rela	From start	0.000
	Wx_Max - Rüzgar Yükü	GCS	Uniform	-0.06	1.000	Length		0.000
LF938	300YKB259	Wind	X	-0.06	0.000	Rela	From start	0.000
	Wx_Max - Rüzgar Yükü	GCS	Uniform	-0.06	1.000	Length		0.000
LF939	300YKB260	Wind	X	-0.06	0.000	Rela	From start	0.000
	Wx_Max - Rüzgar Yükü	GCS	Uniform	-0.06	1.000	Length		0.000
LF941	300YKB262	Wind	X	-0.06	0.000	Rela	From start	0.000
	Wx_Max - Rüzgar Yükü	GCS	Uniform	-0.06	1.000	Length		0.000
LF942	300YKB263	Wind	X	-0.06	0.000	Rela	From start	0.000
	Wx_Max - Rüzgar Yükü	GCS	Uniform	-0.06	1.000	Length		0.000
LF944	300YKB265	Wind	X	-0.06	0.000	Rela	From start	0.000
	Wx_Max - Rüzgar Yükü	GCS	Uniform	-0.06	1.000	Length		0.000
LF945	300YKB266	Wind	X	-0.06	0.000	Rela	From start	0.000

Name	Member	Type	Dir	Value - P_1 [kN/m]	Pos x_1	Coor	Orig	Ecc ey [cm]
	Load case	System	Distribution	Value - P_2 [kN/m]	Pos x_2	Loc		Ecc ez [cm]
	Wx_Max - Rüzgar Yükü	GCS	Uniform	-0.06	1.000	Length		0.000
LF947	300YKB268	Wind	X	-0.06	0.000	Rela	From start	0.000
	Wx_Max - Rüzgar Yükü	GCS	Uniform	-0.06	1.000	Length		0.000
LF948	300YKB269	Wind	X	-0.06	0.000	Rela	From start	0.000
	Wx_Max - Rüzgar Yükü	GCS	Uniform	-0.06	1.000	Length		0.000
LF950	300YKB271	Wind	X	-0.06	0.000	Rela	From start	0.000
	Wx_Max - Rüzgar Yükü	GCS	Uniform	-0.06	1.000	Length		0.000
LF951	300YKB272	Wind	X	-0.06	0.000	Rela	From start	0.000
	Wx_Max - Rüzgar Yükü	GCS	Uniform	-0.06	1.000	Length		0.000
LF953	300YKB274	Wind	X	-0.06	0.000	Rela	From start	0.000
	Wx_Max - Rüzgar Yükü	GCS	Uniform	-0.06	1.000	Length		0.000
LF954	300YKB275	Wind	X	-0.06	0.000	Rela	From start	0.000
	Wx_Max - Rüzgar Yükü	GCS	Uniform	-0.06	1.000	Length		0.000
LF956	300YKB277	Wind	X	-0.06	0.000	Rela	From start	0.000
	Wx_Max - Rüzgar Yükü	GCS	Uniform	-0.06	1.000	Length		0.000
LF957	300YKB278	Wind	X	-0.06	0.000	Rela	From start	0.000
	Wx_Max - Rüzgar Yükü	GCS	Uniform	-0.06	1.000	Length		0.000
LF959	300YKB280	Wind	X	-0.06	0.000	Rela	From start	0.000
	Wx_Max - Rüzgar Yükü	GCS	Uniform	-0.06	1.000	Length		0.000
LF960	300YKB281	Wind	X	-0.06	0.000	Rela	From start	0.000
	Wx_Max - Rüzgar Yükü	GCS	Uniform	-0.06	1.000	Length		0.000
LF962	300YKB283	Wind	X	-0.06	0.000	Rela	From start	0.000
	Wx_Max - Rüzgar Yükü	GCS	Uniform	-0.06	1.000	Length		0.000
LF963	300YKB284	Wind	X	-0.06	0.000	Rela	From start	0.000
	Wx_Max - Rüzgar Yükü	GCS	Uniform	-0.06	1.000	Length		0.000
LF965	300YKB286	Wind	X	-0.06	0.000	Rela	From start	0.000
	Wx_Max - Rüzgar Yükü	GCS	Uniform	-0.06	1.000	Length		0.000
LF966	300YKB287	Wind	X	-0.06	0.000	Rela	From start	0.000
	Wx_Max - Rüzgar Yükü	GCS	Uniform	-0.06	1.000	Length		0.000
LF968	300YKB289	Wind	X	-0.06	0.000	Rela	From start	0.000
	Wx_Max - Rüzgar Yükü	GCS	Uniform	-0.06	1.000	Length		0.000
LF969	300YKB290	Wind	X	-0.06	0.000	Rela	From start	0.000
	Wx_Max - Rüzgar Yükü	GCS	Uniform	-0.06	1.000	Length		0.000
LF971	300YKB292	Wind	X	-0.06	0.000	Rela	From start	0.000
	Wx_Max - Rüzgar Yükü	GCS	Uniform	-0.06	1.000	Length		0.000
LF972	300YKB293	Wind	X	-0.06	0.000	Rela	From start	0.000
	Wx_Max - Rüzgar Yükü	GCS	Uniform	-0.06	1.000	Length		0.000
LF974	300YKB295	Wind	X	-0.06	0.000	Rela	From start	0.000
	Wx_Max - Rüzgar Yükü	GCS	Uniform	-0.06	1.000	Length		0.000
LF975	300YKB296	Wind	X	-0.06	0.000	Rela	From start	0.000
	Wx_Max - Rüzgar Yükü	GCS	Uniform	-0.06	1.000	Length		0.000
LF977	300YKB298	Wind	X	-0.06	0.000	Rela	From start	0.000
	Wx_Max - Rüzgar Yükü	GCS	Uniform	-0.06	1.000	Length		0.000
LF978	300YKB299	Wind	X	-0.06	0.000	Rela	From start	0.000
	Wx_Max - Rüzgar Yükü	GCS	Uniform	-0.06	1.000	Length		0.000
LF980	300YKB301	Wind	X	-0.07	0.000	Rela	From start	0.000
	Wx_Max - Rüzgar Yükü	GCS	Uniform	-0.07	1.000	Length		0.000
LF981	300YKB302	Wind	X	-0.07	0.000	Rela	From start	0.000
	Wx_Max - Rüzgar Yükü	GCS	Uniform	-0.07	1.000	Length		0.000
LF983	300YKB304	Wind	X	-0.07	0.000	Rela	From start	0.000
	Wx_Max - Rüzgar Yükü	GCS	Uniform	-0.07	1.000	Length		0.000
LF984	300YKB305	Wind	X	-0.07	0.000	Rela	From start	0.000
	Wx_Max - Rüzgar Yükü	GCS	Uniform	-0.07	1.000	Length		0.000
LF986	300YKB307	Wind	X	-0.07	0.000	Rela	From start	0.000
	Wx_Max - Rüzgar Yükü	GCS	Uniform	-0.07	1.000	Length		0.000
LF987	300YKB308	Wind	X	-0.07	0.000	Rela	From start	0.000
	Wx_Max - Rüzgar Yükü	GCS	Uniform	-0.07	1.000	Length		0.000
LF989	300YKB310	Wind	X	-0.07	0.000	Rela	From start	0.000
	Wx_Max - Rüzgar Yükü	GCS	Uniform	-0.07	1.000	Length		0.000
LF990	300YKB311	Wind	X	-0.07	0.000	Rela	From start	0.000
	Wx_Max - Rüzgar Yükü	GCS	Uniform	-0.07	1.000	Length		0.000
LF992	300YKB313	Wind	X	-0.07	0.000	Rela	From start	0.000
	Wx_Max - Rüzgar Yükü	GCS	Uniform	-0.07	1.000	Length		0.000
LF993	300YKB314	Wind	X	-0.07	0.000	Rela	From start	0.000
	Wx_Max - Rüzgar Yükü	GCS	Uniform	-0.07	1.000	Length		0.000
LF995	300YKB316	Wind	X	-0.07	0.000	Rela	From start	0.000
	Wx_Max - Rüzgar Yükü	GCS	Uniform	-0.07	1.000	Length		0.000
LF996	300YKB317	Wind	X	-0.07	0.000	Rela	From start	0.000
	Wx_Max - Rüzgar Yükü	GCS	Uniform	-0.07	1.000	Length		0.000
LF998	300YKB319	Wind	X	-0.07	0.000	Rela	From start	0.000
	Wx_Max - Rüzgar Yükü	GCS	Uniform	-0.07	1.000	Length		0.000
LF999	300YKB320	Wind	X	-0.07	0.000	Rela	From start	0.000
	Wx_Max - Rüzgar Yükü	GCS	Uniform	-0.07	1.000	Length		0.000
LF1001	300YKB322	Wind	X	-0.07	0.000	Rela	From start	0.000

Name	Member	Type	Dir	Value - P_1 [kN/m]	Pos x_1	Coor	Orig	Ecc ey [cm]
	Load case	System	Distribution	Value - P_2 [kN/m]	Pos x_2	Loc		Ecc ez [cm]
	Wx_Max - Rüzgar Yükü	GCS	Uniform	-0.07	1.000	Length		0.000
LF1002	300YKB323	Wind	X	-0.07	0.000	Rela	From start	0.000
	Wx_Max - Rüzgar Yükü	GCS	Uniform	-0.07	1.000	Length		0.000
LF1004	300YKB325	Wind	X	-0.07	0.000	Rela	From start	0.000
	Wx_Max - Rüzgar Yükü	GCS	Uniform	-0.07	1.000	Length		0.000
LF1005	300YKB326	Wind	X	-0.07	0.000	Rela	From start	0.000
	Wx_Max - Rüzgar Yükü	GCS	Uniform	-0.07	1.000	Length		0.000
LF1007	300YKB328	Wind	X	-0.07	0.000	Rela	From start	0.000
	Wx_Max - Rüzgar Yükü	GCS	Uniform	-0.07	1.000	Length		0.000
LF1008	300YKB329	Wind	X	-0.07	0.000	Rela	From start	0.000
	Wx_Max - Rüzgar Yükü	GCS	Uniform	-0.07	1.000	Length		0.000
LF1010	300YKB331	Wind	X	-0.07	0.000	Rela	From start	0.000
	Wx_Max - Rüzgar Yükü	GCS	Uniform	-0.07	1.000	Length		0.000
LF1011	300YKB332	Wind	X	-0.07	0.000	Rela	From start	0.000
	Wx_Max - Rüzgar Yükü	GCS	Uniform	-0.07	1.000	Length		0.000
LF1013	300YKB334	Wind	X	-0.07	0.000	Rela	From start	0.000
	Wx_Max - Rüzgar Yükü	GCS	Uniform	-0.07	1.000	Length		0.000
LF1014	300YKB335	Wind	X	-0.07	0.000	Rela	From start	0.000
	Wx_Max - Rüzgar Yükü	GCS	Uniform	-0.07	1.000	Length		0.000
LF1016	300YKB337	Wind	X	-0.07	0.000	Rela	From start	0.000
	Wx_Max - Rüzgar Yükü	GCS	Uniform	-0.07	1.000	Length		0.000
LF1017	300YKB338	Wind	X	-0.07	0.000	Rela	From start	0.000
	Wx_Max - Rüzgar Yükü	GCS	Uniform	-0.07	1.000	Length		0.000
LF1019	300YKB340	Wind	X	-0.07	0.000	Rela	From start	0.000
	Wx_Max - Rüzgar Yükü	GCS	Uniform	-0.07	1.000	Length		0.000
LF1020	300YKB341	Wind	X	-0.07	0.000	Rela	From start	0.000
	Wx_Max - Rüzgar Yükü	GCS	Uniform	-0.07	1.000	Length		0.000
LF1022	300YKB343	Wind	X	-0.07	0.000	Rela	From start	0.000
	Wx_Max - Rüzgar Yükü	GCS	Uniform	-0.07	1.000	Length		0.000
LF1023	300YKB344	Wind	X	-0.07	0.000	Rela	From start	0.000
	Wx_Max - Rüzgar Yükü	GCS	Uniform	-0.07	1.000	Length		0.000
LF1025	300YKB346	Wind	X	-0.07	0.000	Rela	From start	0.000
	Wx_Max - Rüzgar Yükü	GCS	Uniform	-0.07	1.000	Length		0.000
LF1026	300YKB347	Wind	X	-0.07	0.000	Rela	From start	0.000
	Wx_Max - Rüzgar Yükü	GCS	Uniform	-0.07	1.000	Length		0.000
LF1028	300YKB349	Wind	X	-0.07	0.000	Rela	From start	0.000
	Wx_Max - Rüzgar Yükü	GCS	Uniform	-0.07	1.000	Length		0.000
LF1029	300YKB350	Wind	X	-0.07	0.000	Rela	From start	0.000
	Wx_Max - Rüzgar Yükü	GCS	Uniform	-0.07	1.000	Length		0.000
LF1031	300YKB352	Wind	X	-0.07	0.000	Rela	From start	0.000
	Wx_Max - Rüzgar Yükü	GCS	Uniform	-0.07	1.000	Length		0.000
LF1032	300YKB353	Wind	X	-0.07	0.000	Rela	From start	0.000
	Wx_Max - Rüzgar Yükü	GCS	Uniform	-0.07	1.000	Length		0.000
LF1034	300YKB355	Wind	X	-0.07	0.000	Rela	From start	0.000
	Wx_Max - Rüzgar Yükü	GCS	Uniform	-0.07	1.000	Length		0.000
LF1035	300YKB356	Wind	X	-0.07	0.000	Rela	From start	0.000
	Wx_Max - Rüzgar Yükü	GCS	Uniform	-0.07	1.000	Length		0.000
LF1037	300YKB358	Wind	X	-0.07	0.000	Rela	From start	0.000
	Wx_Max - Rüzgar Yükü	GCS	Uniform	-0.07	1.000	Length		0.000
LF1038	300YKB359	Wind	X	-0.07	0.000	Rela	From start	0.000
	Wx_Max - Rüzgar Yükü	GCS	Uniform	-0.07	1.000	Length		0.000
LF1039	300CKB	Wind	X	-0.05	0.000	Rela	From start	0.000
	Wx_Max - Rüzgar Yükü	GCS	Uniform	-0.05	1.000	Length		0.000
LF1040	300CKB1	Wind	X	-0.05	0.000	Rela	From start	0.000
	Wx_Max - Rüzgar Yükü	GCS	Uniform	-0.05	1.000	Length		0.000
LF1041	300CKB2	Wind	X	-0.05	0.000	Rela	From start	0.000
	Wx_Max - Rüzgar Yükü	GCS	Uniform	-0.05	1.000	Length		0.000
LF1042	300CKB3	Wind	X	-0.05	0.000	Rela	From start	0.000
	Wx_Max - Rüzgar Yükü	GCS	Uniform	-0.06	1.000	Length		0.000
LF1043	300CKB4	Wind	X	-0.06	0.000	Rela	From start	0.000
	Wx_Max - Rüzgar Yükü	GCS	Uniform	-0.06	1.000	Length		0.000
LF1044	300CKB5	Wind	X	-0.06	0.000	Rela	From start	0.000
	Wx_Max - Rüzgar Yükü	GCS	Uniform	-0.06	1.000	Length		0.000
LF1045	300CKB6	Wind	X	-0.06	0.000	Rela	From start	0.000
	Wx_Max - Rüzgar Yükü	GCS	Uniform	-0.06	1.000	Length		0.000
LF1046	300CKB7	Wind	X	-0.06	0.000	Rela	From start	0.000
	Wx_Max - Rüzgar Yükü	GCS	Uniform	-0.06	1.000	Length		0.000
LF1047	300CKB8	Wind	X	-0.06	0.000	Rela	From start	0.000
	Wx_Max - Rüzgar Yükü	GCS	Uniform	-0.06	1.000	Length		0.000
LF1048	300CKB9	Wind	X	-0.06	0.000	Rela	From start	0.000
	Wx_Max - Rüzgar Yükü	GCS	Uniform	-0.07	1.000	Length		0.000
LF1049	300CKB10	Wind	X	-0.07	0.000	Rela	From start	0.000
	Wx_Max - Rüzgar Yükü	GCS	Uniform	-0.07	1.000	Length		0.000
LF1050	300CKB11	Wind	X	-0.05	0.000	Rela	From start	0.000

Name	Member	Type	Dir	Value - P_1 [kN/m]	Pos x_1	Coor	Orig	Ecc ey [cm]
	Load case	System	Distribution	Value - P_2 [kN/m]	Pos x_2	Loc		Ecc ez [cm]
	Wx_Max - Rüzgar Yükü	GCS	Uniform	-0.05	1.000	Length		0.000
LF1051	300CKB12	Wind	X	-0.05	0.000	Rela	From start	0.000
	Wx_Max - Rüzgar Yükü	GCS	Uniform	-0.05	1.000	Length		0.000
LF1052	300CKB13	Wind	X	-0.05	0.000	Rela	From start	0.000
	Wx_Max - Rüzgar Yükü	GCS	Uniform	-0.05	1.000	Length		0.000
LF1053	300CKB14	Wind	X	-0.05	0.000	Rela	From start	0.000
	Wx_Max - Rüzgar Yükü	GCS	Uniform	-0.06	1.000	Length		0.000
LF1054	300CKB15	Wind	X	-0.06	0.000	Rela	From start	0.000
	Wx_Max - Rüzgar Yükü	GCS	Uniform	-0.06	1.000	Length		0.000
LF1055	300CKB16	Wind	X	-0.06	0.000	Rela	From start	0.000
	Wx_Max - Rüzgar Yükü	GCS	Uniform	-0.06	1.000	Length		0.000
LF1056	300CKB17	Wind	X	-0.06	0.000	Rela	From start	0.000
	Wx_Max - Rüzgar Yükü	GCS	Uniform	-0.06	1.000	Length		0.000
LF1057	300CKB18	Wind	X	-0.06	0.000	Rela	From start	0.000
	Wx_Max - Rüzgar Yükü	GCS	Uniform	-0.06	1.000	Length		0.000
LF1058	300CKB19	Wind	X	-0.06	0.000	Rela	From start	0.000
	Wx_Max - Rüzgar Yükü	GCS	Uniform	-0.06	1.000	Length		0.000
LF1059	300CKB20	Wind	X	-0.06	0.000	Rela	From start	0.000
	Wx_Max - Rüzgar Yükü	GCS	Uniform	-0.07	1.000	Length		0.000
LF1060	300CKB21	Wind	X	-0.07	0.000	Rela	From start	0.000
	Wx_Max - Rüzgar Yükü	GCS	Uniform	-0.07	1.000	Length		0.000
LF1061	300FDD6F	Force	Y	0.01	0.000	Rela	From start	0.000
	Wy_Çalışma - Rüzgar Yükü	GCS	Uniform		1.000	Length		0.000
LF1062	300FDD6F0	Force	Y	0.01	0.000	Rela	From start	0.000
	Wy_Çalışma - Rüzgar Yükü	GCS	Uniform		1.000	Length		0.000
LF1063	300FDD6F21	Force	Y	0.01	0.000	Rela	From start	0.000
	Wy_Çalışma - Rüzgar Yükü	GCS	Uniform		1.000	Length		0.000
LF1064	300FDD6F22	Force	Y	0.01	0.000	Rela	From start	0.000
	Wy_Çalışma - Rüzgar Yükü	GCS	Uniform		1.000	Length		0.000
LF1065	300FDD6F43	Force	Y	0.01	0.000	Rela	From start	0.000
	Wy_Çalışma - Rüzgar Yükü	GCS	Uniform		1.000	Length		0.000
LF1066	300FDD6F44	Force	Y	0.01	0.000	Rela	From start	0.000
	Wy_Çalışma - Rüzgar Yükü	GCS	Uniform		1.000	Length		0.000
LF1067	300FDD6F65	Force	Y	0.01	0.000	Rela	From start	0.000
	Wy_Çalışma - Rüzgar Yükü	GCS	Uniform		1.000	Length		0.000
LF1068	300FDD6F66	Force	Y	0.01	0.000	Rela	From start	0.000
	Wy_Çalışma - Rüzgar Yükü	GCS	Uniform		1.000	Length		0.000
LF1069	300FDD6F87	Force	Y	0.01	0.000	Rela	From start	0.000
	Wy_Çalışma - Rüzgar Yükü	GCS	Uniform		1.000	Length		0.000
LF1070	300FDD6F88	Force	Y	0.01	0.000	Rela	From start	0.000
	Wy_Çalışma - Rüzgar Yükü	GCS	Uniform		1.000	Length		0.000
LF1071	300FDD6F109	Force	Y	0.01	0.000	Rela	From start	0.000
	Wy_Çalışma - Rüzgar Yükü	GCS	Uniform		1.000	Length		0.000
LF1072	300FDD6F110	Force	Y	0.01	0.000	Rela	From start	0.000
	Wy_Çalışma - Rüzgar Yükü	GCS	Uniform		1.000	Length		0.000
LF1073	300FDD6F131	Force	Y	0.01	0.000	Rela	From start	0.000
	Wy_Çalışma - Rüzgar Yükü	GCS	Uniform		1.000	Length		0.000
LF1074	300FDD6F132	Force	Y	0.01	0.000	Rela	From start	0.000
	Wy_Çalışma - Rüzgar Yükü	GCS	Uniform		1.000	Length		0.000
LF1075	300FDD6F153	Force	Y	0.01	0.000	Rela	From start	0.000
	Wy_Çalışma - Rüzgar Yükü	GCS	Uniform		1.000	Length		0.000
LF1076	300FDD6F154	Force	Y	0.01	0.000	Rela	From start	0.000
	Wy_Çalışma - Rüzgar Yükü	GCS	Uniform		1.000	Length		0.000
LF1077	110YKB	Force	Y	0.01	0.000	Rela	From start	0.000
	Wy_Çalışma - Rüzgar Yükü	GCS	Uniform		1.000	Length		0.000
LF1078	110YKB1	Force	Y	0.01	0.000	Rela	From start	0.000
	Wy_Çalışma - Rüzgar Yükü	GCS	Uniform		1.000	Length		0.000
LF1079	110YKB2	Force	Y	0.01	0.000	Rela	From start	0.000
	Wy_Çalışma - Rüzgar Yükü	GCS	Uniform		1.000	Length		0.000
LF1080	110YKB3	Force	Y	0.01	0.000	Rela	From start	0.000
	Wy_Çalışma - Rüzgar Yükü	GCS	Uniform		1.000	Length		0.000
LF1081	110YKB4	Force	Y	0.01	0.000	Rela	From start	0.000
	Wy_Çalışma - Rüzgar Yükü	GCS	Uniform		1.000	Length		0.000
LF1082	110YKB5	Force	Y	0.01	0.000	Rela	From start	0.000
	Wy_Çalışma - Rüzgar Yükü	GCS	Uniform		1.000	Length		0.000
LF1083	110YKB6	Force	Y	0.01	0.000	Rela	From start	0.000
	Wy_Çalışma - Rüzgar Yükü	GCS	Uniform		1.000	Length		0.000
LF1084	110YKB7	Force	Y	0.01	0.000	Rela	From start	0.000
	Wy_Çalışma - Rüzgar Yükü	GCS	Uniform		1.000	Length		0.000
LF1085	110YKB8	Force	Y	0.01	0.000	Rela	From start	0.000
	Wy_Çalışma - Rüzgar Yükü	GCS	Uniform		1.000	Length		0.000
LF1086	110YKB9	Force	Y	0.01	0.000	Rela	From start	0.000
	Wy_Çalışma - Rüzgar Yükü	GCS	Uniform		1.000	Length		0.000
LF1087	110YKB10	Force	Y	0.01	0.000	Rela	From start	0.000

Name	Member	Type	Dir	Value - P_1 [kN/m]	Pos x_1	Coor	Orig	Ecc ey [cm]
	Load case	System	Distribution	Value - P_2 [kN/m]	Pos x_2	Loc		Ecc ez [cm]
	Wy_Çalışma - Rüzgar Yükü	GCS	Uniform		1.000	Length		0.000
LF1088	110YKB11	Force	Y	0.01	0.000	Rela	From start	0.000
	Wy_Çalışma - Rüzgar Yükü	GCS	Uniform		1.000	Length		0.000
LF1089	110YKB12	Force	Y	0.01	0.000	Rela	From start	0.000
	Wy_Çalışma - Rüzgar Yükü	GCS	Uniform		1.000	Length		0.000
LF1090	110YKB13	Force	Y	0.01	0.000	Rela	From start	0.000
	Wy_Çalışma - Rüzgar Yükü	GCS	Uniform		1.000	Length		0.000
LF1091	110YKB14	Force	Y	0.01	0.000	Rela	From start	0.000
	Wy_Çalışma - Rüzgar Yükü	GCS	Uniform		1.000	Length		0.000
LF1092	110YKB15	Force	Y	0.01	0.000	Rela	From start	0.000
	Wy_Çalışma - Rüzgar Yükü	GCS	Uniform		1.000	Length		0.000
LF1093	110YKB16	Force	Y	0.01	0.000	Rela	From start	0.000
	Wy_Çalışma - Rüzgar Yükü	GCS	Uniform		1.000	Length		0.000
LF1094	110YKB17	Force	Y	0.01	0.000	Rela	From start	0.000
	Wy_Çalışma - Rüzgar Yükü	GCS	Uniform		1.000	Length		0.000
LF1095	110YKB18	Force	Y	0.01	0.000	Rela	From start	0.000
	Wy_Çalışma - Rüzgar Yükü	GCS	Uniform		1.000	Length		0.000
LF1096	110YKB19	Force	Y	0.01	0.000	Rela	From start	0.000
	Wy_Çalışma - Rüzgar Yükü	GCS	Uniform		1.000	Length		0.000
LF1097	110YKB20	Force	Y	0.01	0.000	Rela	From start	0.000
	Wy_Çalışma - Rüzgar Yükü	GCS	Uniform		1.000	Length		0.000
LF1098	110YKB21	Force	Y	0.01	0.000	Rela	From start	0.000
	Wy_Çalışma - Rüzgar Yükü	GCS	Uniform		1.000	Length		0.000
LF1099	110YKB22	Force	Y	0.01	0.000	Rela	From start	0.000
	Wy_Çalışma - Rüzgar Yükü	GCS	Uniform		1.000	Length		0.000
LF1100	110YKB23	Force	Y	0.01	0.000	Rela	From start	0.000
	Wy_Çalışma - Rüzgar Yükü	GCS	Uniform		1.000	Length		0.000
LF1101	110YKB24	Force	Y	0.01	0.000	Rela	From start	0.000
	Wy_Çalışma - Rüzgar Yükü	GCS	Uniform		1.000	Length		0.000
LF1102	110YKB25	Force	Y	0.01	0.000	Rela	From start	0.000
	Wy_Çalışma - Rüzgar Yükü	GCS	Uniform		1.000	Length		0.000
LF1103	110YKB26	Force	Y	0.01	0.000	Rela	From start	0.000
	Wy_Çalışma - Rüzgar Yükü	GCS	Uniform		1.000	Length		0.000
LF1104	110YKB27	Force	Y	0.01	0.000	Rela	From start	0.000
	Wy_Çalışma - Rüzgar Yükü	GCS	Uniform		1.000	Length		0.000
LF1105	110YKB28	Force	Y	0.01	0.000	Rela	From start	0.000
	Wy_Çalışma - Rüzgar Yükü	GCS	Uniform		1.000	Length		0.000
LF1106	110YKB29	Force	Y	0.01	0.000	Rela	From start	0.000
	Wy_Çalışma - Rüzgar Yükü	GCS	Uniform		1.000	Length		0.000
LF1107	110YKB30	Force	Y	0.01	0.000	Rela	From start	0.000
	Wy_Çalışma - Rüzgar Yükü	GCS	Uniform		1.000	Length		0.000
LF1108	110YKB31	Force	Y	0.01	0.000	Rela	From start	0.000
	Wy_Çalışma - Rüzgar Yükü	GCS	Uniform		1.000	Length		0.000
LF1109	110YKB32	Force	Y	0.01	0.000	Rela	From start	0.000
	Wy_Çalışma - Rüzgar Yükü	GCS	Uniform		1.000	Length		0.000
LF1110	110YKB33	Force	Y	0.01	0.000	Rela	From start	0.000
	Wy_Çalışma - Rüzgar Yükü	GCS	Uniform		1.000	Length		0.000
LF1111	110YKB34	Force	Y	0.01	0.000	Rela	From start	0.000
	Wy_Çalışma - Rüzgar Yükü	GCS	Uniform		1.000	Length		0.000
LF1112	110YKB35	Force	Y	0.01	0.000	Rela	From start	0.000
	Wy_Çalışma - Rüzgar Yükü	GCS	Uniform		1.000	Length		0.000
LF1113	300FDD6F	Wind	Y	0.05	0.000	Rela	From start	0.000
	Wy_Max - Rüzgar Yükü	GCS	Uniform	0.05	1.000	Length		0.000
LF1114	300FDD6F0	Wind	Y	0.05	0.000	Rela	From start	0.000
	Wy_Max - Rüzgar Yükü	GCS	Uniform	0.05	1.000	Length		0.000
LF1115	300FDD6F21	Wind	Y	0.05	0.000	Rela	From start	0.000
	Wy_Max - Rüzgar Yükü	GCS	Uniform	0.05	1.000	Length		0.000
LF1116	300FDD6F22	Wind	Y	0.05	0.000	Rela	From start	0.000
	Wy_Max - Rüzgar Yükü	GCS	Uniform	0.05	1.000	Length		0.000
LF1117	300FDD6F43	Wind	Y	0.05	0.000	Rela	From start	0.000
	Wy_Max - Rüzgar Yükü	GCS	Uniform	0.06	1.000	Length		0.000
LF1118	300FDD6F44	Wind	Y	0.05	0.000	Rela	From start	0.000
	Wy_Max - Rüzgar Yükü	GCS	Uniform	0.06	1.000	Length		0.000
LF1119	300FDD6F65	Wind	Y	0.06	0.000	Rela	From start	0.000
	Wy_Max - Rüzgar Yükü	GCS	Uniform	0.06	1.000	Length		0.000
LF1120	300FDD6F66	Wind	Y	0.06	0.000	Rela	From start	0.000
	Wy_Max - Rüzgar Yükü	GCS	Uniform	0.06	1.000	Length		0.000
LF1121	300FDD6F87	Wind	Y	0.06	0.000	Rela	From start	0.000
	Wy_Max - Rüzgar Yükü	GCS	Uniform	0.06	1.000	Length		0.000
LF1122	300FDD6F88	Wind	Y	0.06	0.000	Rela	From start	0.000
	Wy_Max - Rüzgar Yükü	GCS	Uniform	0.06	1.000	Length		0.000
LF1123	300FDD6F109	Wind	Y	0.06	0.000	Rela	From start	0.000
	Wy_Max - Rüzgar Yükü	GCS	Uniform	0.06	1.000	Length		0.000
LF1124	300FDD6F110	Wind	Y	0.06	0.000	Rela	From start	0.000

Name	Member	Type	Dir	Value - P_1 [kN/m]	Pos x_1	Coor	Orig	Ecc ey [cm]
	Load case	System	Distribution	Value - P_2 [kN/m]	Pos x_2	Loc		Ecc ez [cm]
	Wy_Max - Rüzgar Yükü	GCS	Uniform	0.06	1.000	Length		0.000
LF1125	300FDD6F131	Wind	Y	0.06	0.000	Rela	From start	0.000
	Wy_Max - Rüzgar Yükü	GCS	Uniform	0.07	1.000	Length		0.000
LF1126	300FDD6F132	Wind	Y	0.06	0.000	Rela	From start	0.000
	Wy_Max - Rüzgar Yükü	GCS	Uniform	0.07	1.000	Length		0.000
LF1127	300FDD6F153	Wind	Y	0.07	0.000	Rela	From start	0.000
	Wy_Max - Rüzgar Yükü	GCS	Uniform	0.07	1.000	Length		0.000
LF1128	300FDD6F154	Wind	Y	0.07	0.000	Rela	From start	0.000
	Wy_Max - Rüzgar Yükü	GCS	Uniform	0.07	1.000	Length		0.000
LF1129	110YKB	Wind	Y	0.05	0.000	Rela	From start	0.000
	Wy_Max - Rüzgar Yükü	GCS	Uniform	0.05	1.000	Length		0.000
LF1130	110YKB1	Wind	Y	0.05	0.000	Rela	From start	0.000
	Wy_Max - Rüzgar Yükü	GCS	Uniform	0.05	1.000	Length		0.000
LF1131	110YKB2	Wind	Y	0.05	0.000	Rela	From start	0.000
	Wy_Max - Rüzgar Yükü	GCS	Uniform	0.05	1.000	Length		0.000
LF1132	110YKB3	Wind	Y	0.05	0.000	Rela	From start	0.000
	Wy_Max - Rüzgar Yükü	GCS	Uniform	0.05	1.000	Length		0.000
LF1133	110YKB4	Wind	Y	0.05	0.000	Rela	From start	0.000
	Wy_Max - Rüzgar Yükü	GCS	Uniform	0.05	1.000	Length		0.000
LF1134	110YKB5	Wind	Y	0.05	0.000	Rela	From start	0.000
	Wy_Max - Rüzgar Yükü	GCS	Uniform	0.05	1.000	Length		0.000
LF1135	110YKB6	Wind	Y	0.05	0.000	Rela	From start	0.000
	Wy_Max - Rüzgar Yükü	GCS	Uniform	0.05	1.000	Length		0.000
LF1136	110YKB7	Wind	Y	0.05	0.000	Rela	From start	0.000
	Wy_Max - Rüzgar Yükü	GCS	Uniform	0.05	1.000	Length		0.000
LF1137	110YKB8	Wind	Y	0.05	0.000	Rela	From start	0.000
	Wy_Max - Rüzgar Yükü	GCS	Uniform	0.05	1.000	Length		0.000
LF1138	110YKB9	Wind	Y	0.05	0.000	Rela	From start	0.000
	Wy_Max - Rüzgar Yükü	GCS	Uniform	0.05	1.000	Length		0.000
LF1139	110YKB10	Wind	Y	0.06	0.000	Rela	From start	0.000
	Wy_Max - Rüzgar Yükü	GCS	Uniform	0.06	1.000	Length		0.000
LF1140	110YKB11	Wind	Y	0.06	0.000	Rela	From start	0.000
	Wy_Max - Rüzgar Yükü	GCS	Uniform	0.06	1.000	Length		0.000
LF1141	110YKB12	Wind	Y	0.06	0.000	Rela	From start	0.000
	Wy_Max - Rüzgar Yükü	GCS	Uniform	0.06	1.000	Length		0.000
LF1142	110YKB13	Wind	Y	0.06	0.000	Rela	From start	0.000
	Wy_Max - Rüzgar Yükü	GCS	Uniform	0.06	1.000	Length		0.000
LF1143	110YKB14	Wind	Y	0.06	0.000	Rela	From start	0.000
	Wy_Max - Rüzgar Yükü	GCS	Uniform	0.06	1.000	Length		0.000
LF1144	110YKB15	Wind	Y	0.06	0.000	Rela	From start	0.000
	Wy_Max - Rüzgar Yükü	GCS	Uniform	0.06	1.000	Length		0.000
LF1145	110YKB16	Wind	Y	0.06	0.000	Rela	From start	0.000
	Wy_Max - Rüzgar Yükü	GCS	Uniform	0.06	1.000	Length		0.000
LF1146	110YKB17	Wind	Y	0.06	0.000	Rela	From start	0.000
	Wy_Max - Rüzgar Yükü	GCS	Uniform	0.06	1.000	Length		0.000
LF1147	110YKB18	Wind	Y	0.06	0.000	Rela	From start	0.000
	Wy_Max - Rüzgar Yükü	GCS	Uniform	0.06	1.000	Length		0.000
LF1148	110YKB19	Wind	Y	0.06	0.000	Rela	From start	0.000
	Wy_Max - Rüzgar Yükü	GCS	Uniform	0.06	1.000	Length		0.000
LF1149	110YKB20	Wind	Y	0.06	0.000	Rela	From start	0.000
	Wy_Max - Rüzgar Yükü	GCS	Uniform	0.06	1.000	Length		0.000
LF1150	110YKB21	Wind	Y	0.06	0.000	Rela	From start	0.000
	Wy_Max - Rüzgar Yükü	GCS	Uniform	0.06	1.000	Length		0.000
LF1151	110YKB22	Wind	Y	0.06	0.000	Rela	From start	0.000
	Wy_Max - Rüzgar Yükü	GCS	Uniform	0.06	1.000	Length		0.000
LF1152	110YKB23	Wind	Y	0.06	0.000	Rela	From start	0.000
	Wy_Max - Rüzgar Yükü	GCS	Uniform	0.06	1.000	Length		0.000
LF1153	110YKB24	Wind	Y	0.06	0.000	Rela	From start	0.000
	Wy_Max - Rüzgar Yükü	GCS	Uniform	0.06	1.000	Length		0.000
LF1154	110YKB25	Wind	Y	0.06	0.000	Rela	From start	0.000
	Wy_Max - Rüzgar Yükü	GCS	Uniform	0.06	1.000	Length		0.000
LF1155	110YKB26	Wind	Y	0.06	0.000	Rela	From start	0.000
	Wy_Max - Rüzgar Yükü	GCS	Uniform	0.06	1.000	Length		0.000
LF1156	110YKB27	Wind	Y	0.06	0.000	Rela	From start	0.000
	Wy_Max - Rüzgar Yükü	GCS	Uniform	0.06	1.000	Length		0.000
LF1157	110YKB28	Wind	Y	0.06	0.000	Rela	From start	0.000
	Wy_Max - Rüzgar Yükü	GCS	Uniform	0.06	1.000	Length		0.000
LF1158	110YKB29	Wind	Y	0.06	0.000	Rela	From start	0.000
	Wy_Max - Rüzgar Yükü	GCS	Uniform	0.06	1.000	Length		0.000
LF1159	110YKB30	Wind	Y	0.07	0.000	Rela	From start	0.000
	Wy_Max - Rüzgar Yükü	GCS	Uniform	0.07	1.000	Length		0.000
LF1160	110YKB31	Wind	Y	0.07	0.000	Rela	From start	0.000
	Wy_Max - Rüzgar Yükü	GCS	Uniform	0.07	1.000	Length		0.000
LF1161	110YKB32	Wind	Y	0.07	0.000	Rela	From start	0.000

Name	Member	Type	Dir	Value - P_1 [kN/m]	Pos x_1	Coor	Orig	Ecc ey [cm]
	Load case	System	Distribution	Value - P_2 [kN/m]	Pos x_2	Loc		Ecc ez [cm]
	Wy_Max - Rüzgar Yükü	GCS	Uniform	0.07	1.000	Length		0.000
LF1162	110YKB33	Wind	Y	0.07	0.000	Rela	From start	0.000
	Wy_Max - Rüzgar Yükü	GCS	Uniform	0.07	1.000	Length		0.000
LF1163	110YKB34	Wind	Y	0.07	0.000	Rela	From start	0.000
	Wy_Max - Rüzgar Yükü	GCS	Uniform	0.07	1.000	Length		0.000
LF1164	110YKB35	Wind	Y	0.07	0.000	Rela	From start	0.000
	Wy_Max - Rüzgar Yükü	GCS	Uniform	0.07	1.000	Length		0.000
LF1165	C.Platform	Force	X	-0.05	0.000	Rela	From start	0.000
	Wx_Çalışma - Rüzgar Yükü	GCS	Uniform		1.000	Length		0.000
LF1166	C.Platform2	Force	X	-0.05	0.000	Rela	From start	0.000
	Wx_Çalışma - Rüzgar Yükü	GCS	Uniform		1.000	Length		0.000
LF1167	C.Platform5	Force	X	-0.05	0.000	Rela	From start	0.000
	Wx_Çalışma - Rüzgar Yükü	GCS	Uniform		1.000	Length		0.000
LF1168	C.Platform8	Force	X	-0.05	0.000	Rela	From start	0.000
	Wx_Çalışma - Rüzgar Yükü	GCS	Uniform		1.000	Length		0.000
LF1169	C.Platform11	Force	X	-0.05	0.000	Rela	From start	0.000
	Wx_Çalışma - Rüzgar Yükü	GCS	Uniform		1.000	Length		0.000
LF1170	C.Platform14	Force	X	-0.05	0.000	Rela	From start	0.000
	Wx_Çalışma - Rüzgar Yükü	GCS	Uniform		1.000	Length		0.000
LF1171	C.Platform17	Force	X	-0.05	0.000	Rela	From start	0.000
	Wx_Çalışma - Rüzgar Yükü	GCS	Uniform		1.000	Length		0.000
LF1172	C.Platform20	Force	X	-0.05	0.000	Rela	From start	0.000
	Wx_Çalışma - Rüzgar Yükü	GCS	Uniform		1.000	Length		0.000
LF1173	C.Platform23	Force	X	-0.05	0.000	Rela	From start	0.000
	Wx_Çalışma - Rüzgar Yükü	GCS	Uniform		1.000	Length		0.000
LF1174	C.Platform26	Force	X	-0.05	0.000	Rela	From start	0.000
	Wx_Çalışma - Rüzgar Yükü	GCS	Uniform		1.000	Length		0.000
LF1175	C.Platform29	Force	X	-0.05	0.000	Rela	From start	0.000
	Wx_Çalışma - Rüzgar Yükü	GCS	Uniform		1.000	Length		0.000
LF1176	C.Platform32	Force	X	-0.05	0.000	Rela	From start	0.000
	Wx_Çalışma - Rüzgar Yükü	GCS	Uniform		1.000	Length		0.000
LF1177	C.Platform35	Force	X	-0.05	0.000	Rela	From start	0.000
	Wx_Çalışma - Rüzgar Yükü	GCS	Uniform		1.000	Length		0.000
LF1178	C.Platform38	Force	X	-0.05	0.000	Rela	From start	0.000
	Wx_Çalışma - Rüzgar Yükü	GCS	Uniform		1.000	Length		0.000
LF1179	C.Platform41	Force	X	-0.05	0.000	Rela	From start	0.000
	Wx_Çalışma - Rüzgar Yükü	GCS	Uniform		1.000	Length		0.000
LF1180	C.Platform44	Force	X	-0.05	0.000	Rela	From start	0.000
	Wx_Çalışma - Rüzgar Yükü	GCS	Uniform		1.000	Length		0.000
LF1181	C.Platform47	Force	X	-0.05	0.000	Rela	From start	0.000
	Wx_Çalışma - Rüzgar Yükü	GCS	Uniform		1.000	Length		0.000
LF1182	C.Platform50	Force	X	-0.05	0.000	Rela	From start	0.000
	Wx_Çalışma - Rüzgar Yükü	GCS	Uniform		1.000	Length		0.000
LF1183	C.Platform53	Force	X	-0.05	0.000	Rela	From start	0.000
	Wx_Çalışma - Rüzgar Yükü	GCS	Uniform		1.000	Length		0.000
LF1184	C.Platform56	Force	X	-0.05	0.000	Rela	From start	0.000
	Wx_Çalışma - Rüzgar Yükü	GCS	Uniform		1.000	Length		0.000
LF1185	C.Platform59	Force	X	-0.05	0.000	Rela	From start	0.000
	Wx_Çalışma - Rüzgar Yükü	GCS	Uniform		1.000	Length		0.000
LF1186	C.Platform62	Force	X	-0.05	0.000	Rela	From start	0.000
	Wx_Çalışma - Rüzgar Yükü	GCS	Uniform		1.000	Length		0.000
LF1187	C.Platform65	Force	X	-0.05	0.000	Rela	From start	0.000
	Wx_Çalışma - Rüzgar Yükü	GCS	Uniform		1.000	Length		0.000
LF1188	C.Platform68	Force	X	-0.05	0.000	Rela	From start	0.000
	Wx_Çalışma - Rüzgar Yükü	GCS	Uniform		1.000	Length		0.000
LF1189	C.Platform71	Force	X	-0.05	0.000	Rela	From start	0.000
	Wx_Çalışma - Rüzgar Yükü	GCS	Uniform		1.000	Length		0.000
LF1190	C.Platform74	Force	X	-0.05	0.000	Rela	From start	0.000
	Wx_Çalışma - Rüzgar Yükü	GCS	Uniform		1.000	Length		0.000
LF1191	C.Platform77	Force	X	-0.05	0.000	Rela	From start	0.000
	Wx_Çalışma - Rüzgar Yükü	GCS	Uniform		1.000	Length		0.000
LF1192	C.Platform80	Force	X	-0.05	0.000	Rela	From start	0.000
	Wx_Çalışma - Rüzgar Yükü	GCS	Uniform		1.000	Length		0.000
LF1193	C.Platform83	Force	X	-0.05	0.000	Rela	From start	0.000
	Wx_Çalışma - Rüzgar Yükü	GCS	Uniform		1.000	Length		0.000
LF1194	C.Platform86	Force	X	-0.05	0.000	Rela	From start	0.000
	Wx_Çalışma - Rüzgar Yükü	GCS	Uniform		1.000	Length		0.000
LF1195	C.Platform89	Force	X	-0.05	0.000	Rela	From start	0.000
	Wx_Çalışma - Rüzgar Yükü	GCS	Uniform		1.000	Length		0.000
LF1196	C.Platform92	Force	X	-0.05	0.000	Rela	From start	0.000
	Wx_Çalışma - Rüzgar Yükü	GCS	Uniform		1.000	Length		0.000
LF1197	C.Platform95	Force	X	-0.05	0.000	Rela	From start	0.000
	Wx_Çalışma - Rüzgar Yükü	GCS	Uniform		1.000	Length		0.000
LF1198	C.Platform98	Force	X	-0.05	0.000	Rela	From start	0.000

Name	Member	Type	Dir	Value - P_1 [kN/m]	Pos x_1	Coor	Orig	Ecc ey [cm]
	Load case	System	Distribution	Value - P_2 [kN/m]	Pos x_2	Loc		Ecc ez [cm]
	Wx_Çalışma - Rüzgar Yükü	GCS	Uniform		1.000	Length		0.000
LF1199	C.Platform101	Force	X	-0.05	0.000	Rela	From start	0.000
	Wx_Çalışma - Rüzgar Yükü	GCS	Uniform		1.000	Length		0.000
LF1200	C.Platform104	Force	X	-0.05	0.000	Rela	From start	0.000
	Wx_Çalışma - Rüzgar Yükü	GCS	Uniform		1.000	Length		0.000
LF1201	C.Platform107	Force	X	-0.05	0.000	Rela	From start	0.000
	Wx_Çalışma - Rüzgar Yükü	GCS	Uniform		1.000	Length		0.000
LF1202	C.Platform110	Force	X	-0.05	0.000	Rela	From start	0.000
	Wx_Çalışma - Rüzgar Yükü	GCS	Uniform		1.000	Length		0.000
LF1203	C.Platform113	Force	X	-0.05	0.000	Rela	From start	0.000
	Wx_Çalışma - Rüzgar Yükü	GCS	Uniform		1.000	Length		0.000
LF1204	C.Platform116	Force	X	-0.05	0.000	Rela	From start	0.000
	Wx_Çalışma - Rüzgar Yükü	GCS	Uniform		1.000	Length		0.000
LF1205	C.Platform119	Force	X	-0.05	0.000	Rela	From start	0.000
	Wx_Çalışma - Rüzgar Yükü	GCS	Uniform		1.000	Length		0.000
LF1206	C.Platform122	Force	X	-0.05	0.000	Rela	From start	0.000
	Wx_Çalışma - Rüzgar Yükü	GCS	Uniform		1.000	Length		0.000
LF1207	C.Platform125	Force	X	-0.05	0.000	Rela	From start	0.000
	Wx_Çalışma - Rüzgar Yükü	GCS	Uniform		1.000	Length		0.000
LF1208	C.Platform128	Force	X	-0.05	0.000	Rela	From start	0.000
	Wx_Çalışma - Rüzgar Yükü	GCS	Uniform		1.000	Length		0.000
LF1209	C.Platform131	Force	X	-0.05	0.000	Rela	From start	0.000
	Wx_Çalışma - Rüzgar Yükü	GCS	Uniform		1.000	Length		0.000
LF1210	C.Platform134	Force	X	-0.05	0.000	Rela	From start	0.000
	Wx_Çalışma - Rüzgar Yükü	GCS	Uniform		1.000	Length		0.000
LF1211	C.Platform137	Force	X	-0.05	0.000	Rela	From start	0.000
	Wx_Çalışma - Rüzgar Yükü	GCS	Uniform		1.000	Length		0.000
LF1212	C.Platform140	Force	X	-0.05	0.000	Rela	From start	0.000
	Wx_Çalışma - Rüzgar Yükü	GCS	Uniform		1.000	Length		0.000
LF1213	C.Platform143	Force	X	-0.05	0.000	Rela	From start	0.000
	Wx_Çalışma - Rüzgar Yükü	GCS	Uniform		1.000	Length		0.000
LF1214	C.Platform146	Force	X	-0.05	0.000	Rela	From start	0.000
	Wx_Çalışma - Rüzgar Yükü	GCS	Uniform		1.000	Length		0.000
LF1215	C.Platform149	Force	X	-0.05	0.000	Rela	From start	0.000
	Wx_Çalışma - Rüzgar Yükü	GCS	Uniform		1.000	Length		0.000
LF1216	C.Platform152	Force	X	-0.05	0.000	Rela	From start	0.000
	Wx_Çalışma - Rüzgar Yükü	GCS	Uniform		1.000	Length		0.000
LF1217	C.Platform155	Force	X	-0.05	0.000	Rela	From start	0.000
	Wx_Çalışma - Rüzgar Yükü	GCS	Uniform		1.000	Length		0.000
LF1218	C.Platform158	Force	X	-0.05	0.000	Rela	From start	0.000
	Wx_Çalışma - Rüzgar Yükü	GCS	Uniform		1.000	Length		0.000
LF1219	C.Platform161	Force	X	-0.05	0.000	Rela	From start	0.000
	Wx_Çalışma - Rüzgar Yükü	GCS	Uniform		1.000	Length		0.000
LF1220	C.Platform164	Force	X	-0.05	0.000	Rela	From start	0.000
	Wx_Çalışma - Rüzgar Yükü	GCS	Uniform		1.000	Length		0.000
LF1221	C.Platform167	Force	X	-0.05	0.000	Rela	From start	0.000
	Wx_Çalışma - Rüzgar Yükü	GCS	Uniform		1.000	Length		0.000
LF1222	C.Platform170	Force	X	-0.05	0.000	Rela	From start	0.000
	Wx_Çalışma - Rüzgar Yükü	GCS	Uniform		1.000	Length		0.000
LF1223	C.Platform173	Force	X	-0.05	0.000	Rela	From start	0.000
	Wx_Çalışma - Rüzgar Yükü	GCS	Uniform		1.000	Length		0.000
LF1224	C.Platform176	Force	X	-0.05	0.000	Rela	From start	0.000
	Wx_Çalışma - Rüzgar Yükü	GCS	Uniform		1.000	Length		0.000
LF1225	C.Platform179	Force	X	-0.05	0.000	Rela	From start	0.000
	Wx_Çalışma - Rüzgar Yükü	GCS	Uniform		1.000	Length		0.000
LF1226	C.Platform182	Force	X	-0.05	0.000	Rela	From start	0.000
	Wx_Çalışma - Rüzgar Yükü	GCS	Uniform		1.000	Length		0.000
LF1227	C.Platform185	Force	X	-0.05	0.000	Rela	From start	0.000
	Wx_Çalışma - Rüzgar Yükü	GCS	Uniform		1.000	Length		0.000
LF1228	C.Platform188	Force	X	-0.05	0.000	Rela	From start	0.000
	Wx_Çalışma - Rüzgar Yükü	GCS	Uniform		1.000	Length		0.000
LF1229	C.Platform191	Force	X	-0.05	0.000	Rela	From start	0.000
	Wx_Çalışma - Rüzgar Yükü	GCS	Uniform		1.000	Length		0.000
LF1230	C.Platform194	Force	X	-0.05	0.000	Rela	From start	0.000
	Wx_Çalışma - Rüzgar Yükü	GCS	Uniform		1.000	Length		0.000
LF1231	C.Platform197	Force	X	-0.05	0.000	Rela	From start	0.000
	Wx_Çalışma - Rüzgar Yükü	GCS	Uniform		1.000	Length		0.000
LF1232	C.Platform200	Force	X	-0.05	0.000	Rela	From start	0.000
	Wx_Çalışma - Rüzgar Yükü	GCS	Uniform		1.000	Length		0.000
LF1233	C.Platform203	Force	X	-0.05	0.000	Rela	From start	0.000
	Wx_Çalışma - Rüzgar Yükü	GCS	Uniform		1.000	Length		0.000
LF1234	C.Platform206	Force	X	-0.05	0.000	Rela	From start	0.000
	Wx_Çalışma - Rüzgar Yükü	GCS	Uniform		1.000	Length		0.000
LF1235	C.Platform209	Force	X	-0.05	0.000	Rela	From start	0.000

Name	Member	Type	Dir	Value - P_1 [kN/m]	Pos x_1	Coor	Orig	Ecc ey [cm]
	Load case	System	Distribution	Value - P_2 [kN/m]	Pos x_2	Loc		Ecc ez [cm]
	Wx_Çalışma - Rüzgar Yükü	GCS	Uniform		1.000	Length		0.000
LF1236	C.Platform212	Force	X	-0.05	0.000	Rela	From start	0.000
	Wx_Çalışma - Rüzgar Yükü	GCS	Uniform		1.000	Length		0.000
LF1237	C.Platform215	Force	X	-0.05	0.000	Rela	From start	0.000
	Wx_Çalışma - Rüzgar Yükü	GCS	Uniform		1.000	Length		0.000
LF1238	C.Platform218	Force	X	-0.05	0.000	Rela	From start	0.000
	Wx_Çalışma - Rüzgar Yükü	GCS	Uniform		1.000	Length		0.000
LF1239	C.Platform221	Force	X	-0.05	0.000	Rela	From start	0.000
	Wx_Çalışma - Rüzgar Yükü	GCS	Uniform		1.000	Length		0.000
LF1240	C.Platform224	Force	X	-0.05	0.000	Rela	From start	0.000
	Wx_Çalışma - Rüzgar Yükü	GCS	Uniform		1.000	Length		0.000
LF1241	C.Platform227	Force	X	-0.05	0.000	Rela	From start	0.000
	Wx_Çalışma - Rüzgar Yükü	GCS	Uniform		1.000	Length		0.000
LF1242	C.Platform230	Force	X	-0.05	0.000	Rela	From start	0.000
	Wx_Çalışma - Rüzgar Yükü	GCS	Uniform		1.000	Length		0.000
LF1243	C.Platform233	Force	X	-0.05	0.000	Rela	From start	0.000
	Wx_Çalışma - Rüzgar Yükü	GCS	Uniform		1.000	Length		0.000
LF1244	C.Platform236	Force	X	-0.05	0.000	Rela	From start	0.000
	Wx_Çalışma - Rüzgar Yükü	GCS	Uniform		1.000	Length		0.000
LF1245	C.Platform239	Force	X	-0.05	0.000	Rela	From start	0.000
	Wx_Çalışma - Rüzgar Yükü	GCS	Uniform		1.000	Length		0.000
LF1246	C.Platform242	Force	X	-0.05	0.000	Rela	From start	0.000
	Wx_Çalışma - Rüzgar Yükü	GCS	Uniform		1.000	Length		0.000
LF1247	C.Platform245	Force	X	-0.05	0.000	Rela	From start	0.000
	Wx_Çalışma - Rüzgar Yükü	GCS	Uniform		1.000	Length		0.000
LF1248	C.Platform248	Force	X	-0.05	0.000	Rela	From start	0.000
	Wx_Çalışma - Rüzgar Yükü	GCS	Uniform		1.000	Length		0.000
LF1249	C.Platform251	Force	X	-0.05	0.000	Rela	From start	0.000
	Wx_Çalışma - Rüzgar Yükü	GCS	Uniform		1.000	Length		0.000
LF1250	C.Platform254	Force	X	-0.05	0.000	Rela	From start	0.000
	Wx_Çalışma - Rüzgar Yükü	GCS	Uniform		1.000	Length		0.000
LF1251	C.Platform257	Force	X	-0.05	0.000	Rela	From start	0.000
	Wx_Çalışma - Rüzgar Yükü	GCS	Uniform		1.000	Length		0.000
LF1252	C.Platform260	Force	X	-0.05	0.000	Rela	From start	0.000
	Wx_Çalışma - Rüzgar Yükü	GCS	Uniform		1.000	Length		0.000
LF1253	C.Platform263	Force	X	-0.05	0.000	Rela	From start	0.000
	Wx_Çalışma - Rüzgar Yükü	GCS	Uniform		1.000	Length		0.000
LF1254	C.Platform266	Force	X	-0.05	0.000	Rela	From start	0.000
	Wx_Çalışma - Rüzgar Yükü	GCS	Uniform		1.000	Length		0.000
LF1255	C.Platform269	Force	X	-0.05	0.000	Rela	From start	0.000
	Wx_Çalışma - Rüzgar Yükü	GCS	Uniform		1.000	Length		0.000
LF1256	C.Platform272	Force	X	-0.05	0.000	Rela	From start	0.000
	Wx_Çalışma - Rüzgar Yükü	GCS	Uniform		1.000	Length		0.000
LF1257	C.Platform275	Force	X	-0.05	0.000	Rela	From start	0.000
	Wx_Çalışma - Rüzgar Yükü	GCS	Uniform		1.000	Length		0.000
LF1258	C.Platform278	Force	X	-0.05	0.000	Rela	From start	0.000
	Wx_Çalışma - Rüzgar Yükü	GCS	Uniform		1.000	Length		0.000
LF1259	C.Platform281	Force	X	-0.05	0.000	Rela	From start	0.000
	Wx_Çalışma - Rüzgar Yükü	GCS	Uniform		1.000	Length		0.000
LF1260	C.Platform284	Force	X	-0.05	0.000	Rela	From start	0.000
	Wx_Çalışma - Rüzgar Yükü	GCS	Uniform		1.000	Length		0.000
LF1261	C.Platform287	Force	X	-0.05	0.000	Rela	From start	0.000
	Wx_Çalışma - Rüzgar Yükü	GCS	Uniform		1.000	Length		0.000
LF1262	C.Platform290	Force	X	-0.05	0.000	Rela	From start	0.000
	Wx_Çalışma - Rüzgar Yükü	GCS	Uniform		1.000	Length		0.000
LF1263	C.Platform293	Force	X	-0.05	0.000	Rela	From start	0.000
	Wx_Çalışma - Rüzgar Yükü	GCS	Uniform		1.000	Length		0.000
LF1264	C.Platform296	Force	X	-0.05	0.000	Rela	From start	0.000
	Wx_Çalışma - Rüzgar Yükü	GCS	Uniform		1.000	Length		0.000
LF1265	C.Platform299	Force	X	-0.05	0.000	Rela	From start	0.000
	Wx_Çalışma - Rüzgar Yükü	GCS	Uniform		1.000	Length		0.000
LF1266	C.Platform302	Force	X	-0.05	0.000	Rela	From start	0.000
	Wx_Çalışma - Rüzgar Yükü	GCS	Uniform		1.000	Length		0.000
LF1267	C.Platform305	Force	X	-0.05	0.000	Rela	From start	0.000
	Wx_Çalışma - Rüzgar Yükü	GCS	Uniform		1.000	Length		0.000
LF1268	C.Platform308	Force	X	-0.05	0.000	Rela	From start	0.000
	Wx_Çalışma - Rüzgar Yükü	GCS	Uniform		1.000	Length		0.000
LF1269	C.Platform311	Force	X	-0.05	0.000	Rela	From start	0.000
	Wx_Çalışma - Rüzgar Yükü	GCS	Uniform		1.000	Length		0.000
LF1270	C.Platform314	Force	X	-0.05	0.000	Rela	From start	0.000
	Wx_Çalışma - Rüzgar Yükü	GCS	Uniform		1.000	Length		0.000
LF1271	C.Platform317	Force	X	-0.05	0.000	Rela	From start	0.000
	Wx_Çalışma - Rüzgar Yükü	GCS	Uniform		1.000	Length		0.000
LF1272	C.Platform320	Force	X	-0.05	0.000	Rela	From start	0.000

Name	Member	Type	Dir	Value - P_1 [kN/m]	Pos x_1	Coor	Orig	Ecc ey [cm]
	Load case	System	Distribution	Value - P_2 [kN/m]	Pos x_2	Loc		Ecc ez [cm]
	Wx_Çalışma - Rüzgar Yükü	GCS	Uniform		1.000	Length		0.000
LF1273	C.Platform323	Force	X	-0.05	0.000	Rela	From start	0.000
	Wx_Çalışma - Rüzgar Yükü	GCS	Uniform		1.000	Length		0.000
LF1274	C.Platform326	Force	X	-0.05	0.000	Rela	From start	0.000
	Wx_Çalışma - Rüzgar Yükü	GCS	Uniform		1.000	Length		0.000
LF1275	C.Platform329	Force	X	-0.05	0.000	Rela	From start	0.000
	Wx_Çalışma - Rüzgar Yükü	GCS	Uniform		1.000	Length		0.000
LF1276	C.Platform332	Force	X	-0.05	0.000	Rela	From start	0.000
	Wx_Çalışma - Rüzgar Yükü	GCS	Uniform		1.000	Length		0.000
LF1277	C.Platform335	Force	X	-0.05	0.000	Rela	From start	0.000
	Wx_Çalışma - Rüzgar Yükü	GCS	Uniform		1.000	Length		0.000
LF1278	C.Platform338	Force	X	-0.05	0.000	Rela	From start	0.000
	Wx_Çalışma - Rüzgar Yükü	GCS	Uniform		1.000	Length		0.000
LF1279	C.Platform341	Force	X	-0.05	0.000	Rela	From start	0.000
	Wx_Çalışma - Rüzgar Yükü	GCS	Uniform		1.000	Length		0.000
LF1280	C.Platform344	Force	X	-0.05	0.000	Rela	From start	0.000
	Wx_Çalışma - Rüzgar Yükü	GCS	Uniform		1.000	Length		0.000
LF1281	C.Platform347	Force	X	-0.05	0.000	Rela	From start	0.000
	Wx_Çalışma - Rüzgar Yükü	GCS	Uniform		1.000	Length		0.000
LF1282	C.Platform350	Force	X	-0.05	0.000	Rela	From start	0.000
	Wx_Çalışma - Rüzgar Yükü	GCS	Uniform		1.000	Length		0.000
LF1283	C.Platform353	Force	X	-0.05	0.000	Rela	From start	0.000
	Wx_Çalışma - Rüzgar Yükü	GCS	Uniform		1.000	Length		0.000
LF1284	C.Platform356	Force	X	-0.05	0.000	Rela	From start	0.000
	Wx_Çalışma - Rüzgar Yükü	GCS	Uniform		1.000	Length		0.000
LF1285	C.Platform	Wind	X	-0.21	0.000	Rela	From start	0.000
	Wx_Max - Rüzgar Yükü	GCS	Uniform	-0.21	1.000	Length		0.000
LF1286	C.Platform2	Wind	X	-0.21	0.000	Rela	From start	0.000
	Wx_Max - Rüzgar Yükü	GCS	Uniform	-0.21	1.000	Length		0.000
LF1287	C.Platform5	Wind	X	-0.21	0.000	Rela	From start	0.000
	Wx_Max - Rüzgar Yükü	GCS	Uniform	-0.21	1.000	Length		0.000
LF1288	C.Platform8	Wind	X	-0.21	0.000	Rela	From start	0.000
	Wx_Max - Rüzgar Yükü	GCS	Uniform	-0.21	1.000	Length		0.000
LF1289	C.Platform11	Wind	X	-0.21	0.000	Rela	From start	0.000
	Wx_Max - Rüzgar Yükü	GCS	Uniform	-0.21	1.000	Length		0.000
LF1290	C.Platform14	Wind	X	-0.21	0.000	Rela	From start	0.000
	Wx_Max - Rüzgar Yükü	GCS	Uniform	-0.21	1.000	Length		0.000
LF1291	C.Platform17	Wind	X	-0.21	0.000	Rela	From start	0.000
	Wx_Max - Rüzgar Yükü	GCS	Uniform	-0.21	1.000	Length		0.000
LF1292	C.Platform20	Wind	X	-0.21	0.000	Rela	From start	0.000
	Wx_Max - Rüzgar Yükü	GCS	Uniform	-0.21	1.000	Length		0.000
LF1293	C.Platform23	Wind	X	-0.21	0.000	Rela	From start	0.000
	Wx_Max - Rüzgar Yükü	GCS	Uniform	-0.21	1.000	Length		0.000
LF1294	C.Platform26	Wind	X	-0.21	0.000	Rela	From start	0.000
	Wx_Max - Rüzgar Yükü	GCS	Uniform	-0.21	1.000	Length		0.000
LF1295	C.Platform29	Wind	X	-0.22	0.000	Rela	From start	0.000
	Wx_Max - Rüzgar Yükü	GCS	Uniform	-0.22	1.000	Length		0.000
LF1296	C.Platform32	Wind	X	-0.22	0.000	Rela	From start	0.000
	Wx_Max - Rüzgar Yükü	GCS	Uniform	-0.22	1.000	Length		0.000
LF1297	C.Platform35	Wind	X	-0.22	0.000	Rela	From start	0.000
	Wx_Max - Rüzgar Yükü	GCS	Uniform	-0.22	1.000	Length		0.000
LF1298	C.Platform38	Wind	X	-0.22	0.000	Rela	From start	0.000
	Wx_Max - Rüzgar Yükü	GCS	Uniform	-0.22	1.000	Length		0.000
LF1299	C.Platform41	Wind	X	-0.22	0.000	Rela	From start	0.000
	Wx_Max - Rüzgar Yükü	GCS	Uniform	-0.22	1.000	Length		0.000
LF1300	C.Platform44	Wind	X	-0.22	0.000	Rela	From start	0.000
	Wx_Max - Rüzgar Yükü	GCS	Uniform	-0.22	1.000	Length		0.000
LF1301	C.Platform47	Wind	X	-0.22	0.000	Rela	From start	0.000
	Wx_Max - Rüzgar Yükü	GCS	Uniform	-0.22	1.000	Length		0.000
LF1302	C.Platform50	Wind	X	-0.22	0.000	Rela	From start	0.000
	Wx_Max - Rüzgar Yükü	GCS	Uniform	-0.22	1.000	Length		0.000
LF1303	C.Platform53	Wind	X	-0.22	0.000	Rela	From start	0.000
	Wx_Max - Rüzgar Yükü	GCS	Uniform	-0.22	1.000	Length		0.000
LF1304	C.Platform56	Wind	X	-0.22	0.000	Rela	From start	0.000
	Wx_Max - Rüzgar Yükü	GCS	Uniform	-0.22	1.000	Length		0.000
LF1305	C.Platform59	Wind	X	-0.22	0.000	Rela	From start	0.000
	Wx_Max - Rüzgar Yükü	GCS	Uniform	-0.22	1.000	Length		0.000
LF1306	C.Platform62	Wind	X	-0.22	0.000	Rela	From start	0.000
	Wx_Max - Rüzgar Yükü	GCS	Uniform	-0.22	1.000	Length		0.000
LF1307	C.Platform65	Wind	X	-0.22	0.000	Rela	From start	0.000
	Wx_Max - Rüzgar Yükü	GCS	Uniform	-0.22	1.000	Length		0.000
LF1308	C.Platform68	Wind	X	-0.22	0.000	Rela	From start	0.000
	Wx_Max - Rüzgar Yükü	GCS	Uniform	-0.22	1.000	Length		0.000
LF1309	C.Platform71	Wind	X	-0.22	0.000	Rela	From start	0.000

Name	Member	Type	Dir	Value - P_1 [kN/m]	Pos x_1	Coor	Orig	Ecc ey [cm]
	Load case	System	Distribution	Value - P_2 [kN/m]	Pos x_2	Loc		Ecc ez [cm]
	Wx_Max - Rüzgar Yükü	GCS	Uniform	-0.22	1.000	Length		0.000
LF1310	C.Platform74	Wind	X	-0.22	0.000	Rela	From start	0.000
	Wx_Max - Rüzgar Yükü	GCS	Uniform	-0.22	1.000	Length		0.000
LF1311	C.Platform77	Wind	X	-0.22	0.000	Rela	From start	0.000
	Wx_Max - Rüzgar Yükü	GCS	Uniform	-0.22	1.000	Length		0.000
LF1312	C.Platform80	Wind	X	-0.22	0.000	Rela	From start	0.000
	Wx_Max - Rüzgar Yükü	GCS	Uniform	-0.22	1.000	Length		0.000
LF1313	C.Platform83	Wind	X	-0.22	0.000	Rela	From start	0.000
	Wx_Max - Rüzgar Yükü	GCS	Uniform	-0.22	1.000	Length		0.000
LF1314	C.Platform86	Wind	X	-0.22	0.000	Rela	From start	0.000
	Wx_Max - Rüzgar Yükü	GCS	Uniform	-0.22	1.000	Length		0.000
LF1315	C.Platform89	Wind	X	-0.23	0.000	Rela	From start	0.000
	Wx_Max - Rüzgar Yükü	GCS	Uniform	-0.23	1.000	Length		0.000
LF1316	C.Platform92	Wind	X	-0.23	0.000	Rela	From start	0.000
	Wx_Max - Rüzgar Yükü	GCS	Uniform	-0.23	1.000	Length		0.000
LF1317	C.Platform95	Wind	X	-0.23	0.000	Rela	From start	0.000
	Wx_Max - Rüzgar Yükü	GCS	Uniform	-0.23	1.000	Length		0.000
LF1318	C.Platform98	Wind	X	-0.23	0.000	Rela	From start	0.000
	Wx_Max - Rüzgar Yükü	GCS	Uniform	-0.23	1.000	Length		0.000
LF1319	C.Platform101	Wind	X	-0.23	0.000	Rela	From start	0.000
	Wx_Max - Rüzgar Yükü	GCS	Uniform	-0.23	1.000	Length		0.000
LF1320	C.Platform104	Wind	X	-0.23	0.000	Rela	From start	0.000
	Wx_Max - Rüzgar Yükü	GCS	Uniform	-0.23	1.000	Length		0.000
LF1321	C.Platform107	Wind	X	-0.23	0.000	Rela	From start	0.000
	Wx_Max - Rüzgar Yükü	GCS	Uniform	-0.23	1.000	Length		0.000
LF1322	C.Platform110	Wind	X	-0.23	0.000	Rela	From start	0.000
	Wx_Max - Rüzgar Yükü	GCS	Uniform	-0.23	1.000	Length		0.000
LF1323	C.Platform113	Wind	X	-0.23	0.000	Rela	From start	0.000
	Wx_Max - Rüzgar Yükü	GCS	Uniform	-0.23	1.000	Length		0.000
LF1324	C.Platform116	Wind	X	-0.23	0.000	Rela	From start	0.000
	Wx_Max - Rüzgar Yükü	GCS	Uniform	-0.23	1.000	Length		0.000
LF1325	C.Platform119	Wind	X	-0.23	0.000	Rela	From start	0.000
	Wx_Max - Rüzgar Yükü	GCS	Uniform	-0.23	1.000	Length		0.000
LF1326	C.Platform122	Wind	X	-0.23	0.000	Rela	From start	0.000
	Wx_Max - Rüzgar Yükü	GCS	Uniform	-0.23	1.000	Length		0.000
LF1327	C.Platform125	Wind	X	-0.23	0.000	Rela	From start	0.000
	Wx_Max - Rüzgar Yükü	GCS	Uniform	-0.23	1.000	Length		0.000
LF1328	C.Platform128	Wind	X	-0.23	0.000	Rela	From start	0.000
	Wx_Max - Rüzgar Yükü	GCS	Uniform	-0.23	1.000	Length		0.000
LF1329	C.Platform131	Wind	X	-0.23	0.000	Rela	From start	0.000
	Wx_Max - Rüzgar Yükü	GCS	Uniform	-0.23	1.000	Length		0.000
LF1330	C.Platform134	Wind	X	-0.23	0.000	Rela	From start	0.000
	Wx_Max - Rüzgar Yükü	GCS	Uniform	-0.23	1.000	Length		0.000
LF1331	C.Platform137	Wind	X	-0.23	0.000	Rela	From start	0.000
	Wx_Max - Rüzgar Yükü	GCS	Uniform	-0.23	1.000	Length		0.000
LF1332	C.Platform140	Wind	X	-0.23	0.000	Rela	From start	0.000
	Wx_Max - Rüzgar Yükü	GCS	Uniform	-0.23	1.000	Length		0.000
LF1333	C.Platform143	Wind	X	-0.23	0.000	Rela	From start	0.000
	Wx_Max - Rüzgar Yükü	GCS	Uniform	-0.23	1.000	Length		0.000
LF1334	C.Platform146	Wind	X	-0.23	0.000	Rela	From start	0.000
	Wx_Max - Rüzgar Yükü	GCS	Uniform	-0.23	1.000	Length		0.000
LF1335	C.Platform149	Wind	X	-0.24	0.000	Rela	From start	0.000
	Wx_Max - Rüzgar Yükü	GCS	Uniform	-0.24	1.000	Length		0.000
LF1336	C.Platform152	Wind	X	-0.24	0.000	Rela	From start	0.000
	Wx_Max - Rüzgar Yükü	GCS	Uniform	-0.24	1.000	Length		0.000
LF1337	C.Platform155	Wind	X	-0.24	0.000	Rela	From start	0.000
	Wx_Max - Rüzgar Yükü	GCS	Uniform	-0.24	1.000	Length		0.000
LF1338	C.Platform158	Wind	X	-0.24	0.000	Rela	From start	0.000
	Wx_Max - Rüzgar Yükü	GCS	Uniform	-0.24	1.000	Length		0.000
LF1339	C.Platform161	Wind	X	-0.24	0.000	Rela	From start	0.000
	Wx_Max - Rüzgar Yükü	GCS	Uniform	-0.24	1.000	Length		0.000
LF1340	C.Platform164	Wind	X	-0.24	0.000	Rela	From start	0.000
	Wx_Max - Rüzgar Yükü	GCS	Uniform	-0.24	1.000	Length		0.000
LF1341	C.Platform167	Wind	X	-0.24	0.000	Rela	From start	0.000
	Wx_Max - Rüzgar Yükü	GCS	Uniform	-0.24	1.000	Length		0.000
LF1342	C.Platform170	Wind	X	-0.24	0.000	Rela	From start	0.000
	Wx_Max - Rüzgar Yükü	GCS	Uniform	-0.24	1.000	Length		0.000
LF1343	C.Platform173	Wind	X	-0.24	0.000	Rela	From start	0.000
	Wx_Max - Rüzgar Yükü	GCS	Uniform	-0.24	1.000	Length		0.000
LF1344	C.Platform176	Wind	X	-0.24	0.000	Rela	From start	0.000
	Wx_Max - Rüzgar Yükü	GCS	Uniform	-0.24	1.000	Length		0.000
LF1345	C.Platform179	Wind	X	-0.25	0.000	Rela	From start	0.000
	Wx_Max - Rüzgar Yükü	GCS	Uniform	-0.25	1.000	Length		0.000
LF1346	C.Platform182	Wind	X	-0.25	0.000	Rela	From start	0.000

Name	Member	Type	Dir	Value - P_1 [kN/m]	Pos x_1	Coor	Orig	Ecc ey [cm]
	Load case	System	Distribution	Value - P_2 [kN/m]	Pos x_2	Loc		Ecc ez [cm]
	Wx_Max - Rüzgar Yükü	GCS	Uniform	-0.25	1.000	Length		0.000
LF1347	C.Platform185	Wind	X	-0.25	0.000	Rela	From start	0.000
	Wx_Max - Rüzgar Yükü	GCS	Uniform	-0.25	1.000	Length		0.000
LF1348	C.Platform188	Wind	X	-0.25	0.000	Rela	From start	0.000
	Wx_Max - Rüzgar Yükü	GCS	Uniform	-0.25	1.000	Length		0.000
LF1349	C.Platform191	Wind	X	-0.25	0.000	Rela	From start	0.000
	Wx_Max - Rüzgar Yükü	GCS	Uniform	-0.25	1.000	Length		0.000
LF1350	C.Platform194	Wind	X	-0.25	0.000	Rela	From start	0.000
	Wx_Max - Rüzgar Yükü	GCS	Uniform	-0.25	1.000	Length		0.000
LF1351	C.Platform197	Wind	X	-0.25	0.000	Rela	From start	0.000
	Wx_Max - Rüzgar Yükü	GCS	Uniform	-0.25	1.000	Length		0.000
LF1352	C.Platform200	Wind	X	-0.25	0.000	Rela	From start	0.000
	Wx_Max - Rüzgar Yükü	GCS	Uniform	-0.25	1.000	Length		0.000
LF1353	C.Platform203	Wind	X	-0.25	0.000	Rela	From start	0.000
	Wx_Max - Rüzgar Yükü	GCS	Uniform	-0.25	1.000	Length		0.000
LF1354	C.Platform206	Wind	X	-0.25	0.000	Rela	From start	0.000
	Wx_Max - Rüzgar Yükü	GCS	Uniform	-0.25	1.000	Length		0.000
LF1355	C.Platform209	Wind	X	-0.25	0.000	Rela	From start	0.000
	Wx_Max - Rüzgar Yükü	GCS	Uniform	-0.25	1.000	Length		0.000
LF1356	C.Platform212	Wind	X	-0.25	0.000	Rela	From start	0.000
	Wx_Max - Rüzgar Yükü	GCS	Uniform	-0.25	1.000	Length		0.000
LF1357	C.Platform215	Wind	X	-0.25	0.000	Rela	From start	0.000
	Wx_Max - Rüzgar Yükü	GCS	Uniform	-0.25	1.000	Length		0.000
LF1358	C.Platform218	Wind	X	-0.25	0.000	Rela	From start	0.000
	Wx_Max - Rüzgar Yükü	GCS	Uniform	-0.25	1.000	Length		0.000
LF1359	C.Platform221	Wind	X	-0.25	0.000	Rela	From start	0.000
	Wx_Max - Rüzgar Yükü	GCS	Uniform	-0.25	1.000	Length		0.000
LF1360	C.Platform224	Wind	X	-0.25	0.000	Rela	From start	0.000
	Wx_Max - Rüzgar Yükü	GCS	Uniform	-0.25	1.000	Length		0.000
LF1361	C.Platform227	Wind	X	-0.25	0.000	Rela	From start	0.000
	Wx_Max - Rüzgar Yükü	GCS	Uniform	-0.25	1.000	Length		0.000
LF1362	C.Platform230	Wind	X	-0.25	0.000	Rela	From start	0.000
	Wx_Max - Rüzgar Yükü	GCS	Uniform	-0.25	1.000	Length		0.000
LF1363	C.Platform233	Wind	X	-0.25	0.000	Rela	From start	0.000
	Wx_Max - Rüzgar Yükü	GCS	Uniform	-0.25	1.000	Length		0.000
LF1364	C.Platform236	Wind	X	-0.25	0.000	Rela	From start	0.000
	Wx_Max - Rüzgar Yükü	GCS	Uniform	-0.25	1.000	Length		0.000
LF1365	C.Platform239	Wind	X	-0.26	0.000	Rela	From start	0.000
	Wx_Max - Rüzgar Yükü	GCS	Uniform	-0.26	1.000	Length		0.000
LF1366	C.Platform242	Wind	X	-0.26	0.000	Rela	From start	0.000
	Wx_Max - Rüzgar Yükü	GCS	Uniform	-0.26	1.000	Length		0.000
LF1367	C.Platform245	Wind	X	-0.26	0.000	Rela	From start	0.000
	Wx_Max - Rüzgar Yükü	GCS	Uniform	-0.26	1.000	Length		0.000
LF1368	C.Platform248	Wind	X	-0.26	0.000	Rela	From start	0.000
	Wx_Max - Rüzgar Yükü	GCS	Uniform	-0.26	1.000	Length		0.000
LF1369	C.Platform251	Wind	X	-0.26	0.000	Rela	From start	0.000
	Wx_Max - Rüzgar Yükü	GCS	Uniform	-0.26	1.000	Length		0.000
LF1370	C.Platform254	Wind	X	-0.26	0.000	Rela	From start	0.000
	Wx_Max - Rüzgar Yükü	GCS	Uniform	-0.26	1.000	Length		0.000
LF1371	C.Platform257	Wind	X	-0.26	0.000	Rela	From start	0.000
	Wx_Max - Rüzgar Yükü	GCS	Uniform	-0.26	1.000	Length		0.000
LF1372	C.Platform260	Wind	X	-0.26	0.000	Rela	From start	0.000
	Wx_Max - Rüzgar Yükü	GCS	Uniform	-0.26	1.000	Length		0.000
LF1373	C.Platform263	Wind	X	-0.26	0.000	Rela	From start	0.000
	Wx_Max - Rüzgar Yükü	GCS	Uniform	-0.26	1.000	Length		0.000
LF1374	C.Platform266	Wind	X	-0.26	0.000	Rela	From start	0.000
	Wx_Max - Rüzgar Yükü	GCS	Uniform	-0.26	1.000	Length		0.000
LF1375	C.Platform269	Wind	X	-0.27	0.000	Rela	From start	0.000
	Wx_Max - Rüzgar Yükü	GCS	Uniform	-0.27	1.000	Length		0.000
LF1376	C.Platform272	Wind	X	-0.27	0.000	Rela	From start	0.000
	Wx_Max - Rüzgar Yükü	GCS	Uniform	-0.27	1.000	Length		0.000
LF1377	C.Platform275	Wind	X	-0.27	0.000	Rela	From start	0.000
	Wx_Max - Rüzgar Yükü	GCS	Uniform	-0.27	1.000	Length		0.000
LF1378	C.Platform278	Wind	X	-0.27	0.000	Rela	From start	0.000
	Wx_Max - Rüzgar Yükü	GCS	Uniform	-0.27	1.000	Length		0.000
LF1379	C.Platform281	Wind	X	-0.27	0.000	Rela	From start	0.000
	Wx_Max - Rüzgar Yükü	GCS	Uniform	-0.27	1.000	Length		0.000
LF1380	C.Platform284	Wind	X	-0.27	0.000	Rela	From start	0.000
	Wx_Max - Rüzgar Yükü	GCS	Uniform	-0.27	1.000	Length		0.000
LF1381	C.Platform287	Wind	X	-0.27	0.000	Rela	From start	0.000
	Wx_Max - Rüzgar Yükü	GCS	Uniform	-0.27	1.000	Length		0.000
LF1382	C.Platform290	Wind	X	-0.27	0.000	Rela	From start	0.000
	Wx_Max - Rüzgar Yükü	GCS	Uniform	-0.27	1.000	Length		0.000
LF1383	C.Platform293	Wind	X	-0.27	0.000	Rela	From start	0.000

Name	Member	Type	Dir	Value - P_1 [kN/m]	Pos x_1	Coor	Orig	Ecc ey [cm]
	Load case	System	Distribution	Value - P_2 [kN/m]	Pos x_2	Loc		Ecc ez [cm]
	Wx_Max - Rüzgar Yükü	GCS	Uniform	-0.27	1.000	Length		0.000
LF1384	C.Platform296	Wind	X	-0.27	0.000	Rela	From start	0.000
	Wx_Max - Rüzgar Yükü	GCS	Uniform	-0.27	1.000	Length		0.000
LF1385	C.Platform299	Wind	X	-0.27	0.000	Rela	From start	0.000
	Wx_Max - Rüzgar Yükü	GCS	Uniform	-0.27	1.000	Length		0.000
LF1386	C.Platform302	Wind	X	-0.27	0.000	Rela	From start	0.000
	Wx_Max - Rüzgar Yükü	GCS	Uniform	-0.27	1.000	Length		0.000
LF1387	C.Platform305	Wind	X	-0.27	0.000	Rela	From start	0.000
	Wx_Max - Rüzgar Yükü	GCS	Uniform	-0.27	1.000	Length		0.000
LF1388	C.Platform308	Wind	X	-0.27	0.000	Rela	From start	0.000
	Wx_Max - Rüzgar Yükü	GCS	Uniform	-0.27	1.000	Length		0.000
LF1389	C.Platform311	Wind	X	-0.27	0.000	Rela	From start	0.000
	Wx_Max - Rüzgar Yükü	GCS	Uniform	-0.27	1.000	Length		0.000
LF1390	C.Platform314	Wind	X	-0.27	0.000	Rela	From start	0.000
	Wx_Max - Rüzgar Yükü	GCS	Uniform	-0.27	1.000	Length		0.000
LF1391	C.Platform317	Wind	X	-0.27	0.000	Rela	From start	0.000
	Wx_Max - Rüzgar Yükü	GCS	Uniform	-0.27	1.000	Length		0.000
LF1392	C.Platform320	Wind	X	-0.27	0.000	Rela	From start	0.000
	Wx_Max - Rüzgar Yükü	GCS	Uniform	-0.27	1.000	Length		0.000
LF1393	C.Platform323	Wind	X	-0.27	0.000	Rela	From start	0.000
	Wx_Max - Rüzgar Yükü	GCS	Uniform	-0.27	1.000	Length		0.000
LF1394	C.Platform326	Wind	X	-0.27	0.000	Rela	From start	0.000
	Wx_Max - Rüzgar Yükü	GCS	Uniform	-0.27	1.000	Length		0.000
LF1395	C.Platform329	Wind	X	-0.28	0.000	Rela	From start	0.000
	Wx_Max - Rüzgar Yükü	GCS	Uniform	-0.28	1.000	Length		0.000
LF1396	C.Platform332	Wind	X	-0.28	0.000	Rela	From start	0.000
	Wx_Max - Rüzgar Yükü	GCS	Uniform	-0.28	1.000	Length		0.000
LF1397	C.Platform335	Wind	X	-0.28	0.000	Rela	From start	0.000
	Wx_Max - Rüzgar Yükü	GCS	Uniform	-0.28	1.000	Length		0.000
LF1398	C.Platform338	Wind	X	-0.28	0.000	Rela	From start	0.000
	Wx_Max - Rüzgar Yükü	GCS	Uniform	-0.28	1.000	Length		0.000
LF1399	C.Platform341	Wind	X	-0.28	0.000	Rela	From start	0.000
	Wx_Max - Rüzgar Yükü	GCS	Uniform	-0.28	1.000	Length		0.000
LF1400	C.Platform344	Wind	X	-0.28	0.000	Rela	From start	0.000
	Wx_Max - Rüzgar Yükü	GCS	Uniform	-0.28	1.000	Length		0.000
LF1401	C.Platform347	Wind	X	-0.28	0.000	Rela	From start	0.000
	Wx_Max - Rüzgar Yükü	GCS	Uniform	-0.28	1.000	Length		0.000
LF1402	C.Platform350	Wind	X	-0.28	0.000	Rela	From start	0.000
	Wx_Max - Rüzgar Yükü	GCS	Uniform	-0.28	1.000	Length		0.000
LF1403	C.Platform353	Wind	X	-0.28	0.000	Rela	From start	0.000
	Wx_Max - Rüzgar Yükü	GCS	Uniform	-0.28	1.000	Length		0.000
LF1404	C.Platform356	Wind	X	-0.28	0.000	Rela	From start	0.000
	Wx_Max - Rüzgar Yükü	GCS	Uniform	-0.28	1.000	Length		0.000
LF1405	Topukluk	Wind	X	-0.21	0.000	Rela	From start	0.000
	Wx_Max - Rüzgar Yükü	GCS	Uniform	-0.21	1.000	Length		0.000
LF1406	Topukluk1	Wind	X	-0.21	0.000	Rela	From start	0.000
	Wx_Max - Rüzgar Yükü	GCS	Uniform	-0.21	1.000	Length		0.000
LF1407	Topukluk2	Wind	X	-0.21	0.000	Rela	From start	0.000
	Wx_Max - Rüzgar Yükü	GCS	Uniform	-0.21	1.000	Length		0.000
LF1408	Topukluk3	Wind	X	-0.21	0.000	Rela	From start	0.000
	Wx_Max - Rüzgar Yükü	GCS	Uniform	-0.21	1.000	Length		0.000
LF1409	Topukluk4	Wind	X	-0.21	0.000	Rela	From start	0.000
	Wx_Max - Rüzgar Yükü	GCS	Uniform	-0.21	1.000	Length		0.000
LF1410	Topukluk5	Wind	X	-0.21	0.000	Rela	From start	0.000
	Wx_Max - Rüzgar Yükü	GCS	Uniform	-0.21	1.000	Length		0.000
LF1411	Topukluk6	Wind	X	-0.21	0.000	Rela	From start	0.000
	Wx_Max - Rüzgar Yükü	GCS	Uniform	-0.21	1.000	Length		0.000
LF1412	Topukluk7	Wind	X	-0.21	0.000	Rela	From start	0.000
	Wx_Max - Rüzgar Yükü	GCS	Uniform	-0.21	1.000	Length		0.000
LF1413	Topukluk8	Wind	X	-0.21	0.000	Rela	From start	0.000
	Wx_Max - Rüzgar Yükü	GCS	Uniform	-0.21	1.000	Length		0.000
LF1414	Topukluk9	Wind	X	-0.21	0.000	Rela	From start	0.000
	Wx_Max - Rüzgar Yükü	GCS	Uniform	-0.21	1.000	Length		0.000
LF1415	Topukluk10	Wind	X	-0.22	0.000	Rela	From start	0.000
	Wx_Max - Rüzgar Yükü	GCS	Uniform	-0.22	1.000	Length		0.000
LF1416	Topukluk11	Wind	X	-0.22	0.000	Rela	From start	0.000
	Wx_Max - Rüzgar Yükü	GCS	Uniform	-0.22	1.000	Length		0.000
LF1417	Topukluk12	Wind	X	-0.22	0.000	Rela	From start	0.000
	Wx_Max - Rüzgar Yükü	GCS	Uniform	-0.22	1.000	Length		0.000
LF1418	Topukluk13	Wind	X	-0.22	0.000	Rela	From start	0.000
	Wx_Max - Rüzgar Yükü	GCS	Uniform	-0.22	1.000	Length		0.000
LF1419	Topukluk14	Wind	X	-0.22	0.000	Rela	From start	0.000
	Wx_Max - Rüzgar Yükü	GCS	Uniform	-0.22	1.000	Length		0.000
LF1420	Topukluk15	Wind	X	-0.22	0.000	Rela	From start	0.000

Name	Member	Type	Dir	Value - P_1 [kN/m]	Pos x_1	Coor	Orig	Ecc ey [cm]
	Load case	System	Distribution	Value - P_2 [kN/m]	Pos x_2	Loc		Ecc ez [cm]
	Wx_Max - Rüzgar Yükü	GCS	Uniform	-0.22	1.000	Length		0.000
LF1421	Topukluk16	Wind	X	-0.22	0.000	Rela	From start	0.000
	Wx_Max - Rüzgar Yükü	GCS	Uniform	-0.22	1.000	Length		0.000
LF1422	Topukluk17	Wind	X	-0.22	0.000	Rela	From start	0.000
	Wx_Max - Rüzgar Yükü	GCS	Uniform	-0.22	1.000	Length		0.000
LF1423	Topukluk18	Wind	X	-0.22	0.000	Rela	From start	0.000
	Wx_Max - Rüzgar Yükü	GCS	Uniform	-0.22	1.000	Length		0.000
LF1424	Topukluk19	Wind	X	-0.22	0.000	Rela	From start	0.000
	Wx_Max - Rüzgar Yükü	GCS	Uniform	-0.22	1.000	Length		0.000
LF1425	Topukluk20	Wind	X	-0.22	0.000	Rela	From start	0.000
	Wx_Max - Rüzgar Yükü	GCS	Uniform	-0.22	1.000	Length		0.000
LF1426	Topukluk21	Wind	X	-0.22	0.000	Rela	From start	0.000
	Wx_Max - Rüzgar Yükü	GCS	Uniform	-0.22	1.000	Length		0.000
LF1427	Topukluk22	Wind	X	-0.22	0.000	Rela	From start	0.000
	Wx_Max - Rüzgar Yükü	GCS	Uniform	-0.22	1.000	Length		0.000
LF1428	Topukluk23	Wind	X	-0.22	0.000	Rela	From start	0.000
	Wx_Max - Rüzgar Yükü	GCS	Uniform	-0.22	1.000	Length		0.000
LF1429	Topukluk24	Wind	X	-0.22	0.000	Rela	From start	0.000
	Wx_Max - Rüzgar Yükü	GCS	Uniform	-0.22	1.000	Length		0.000
LF1430	Topukluk25	Wind	X	-0.22	0.000	Rela	From start	0.000
	Wx_Max - Rüzgar Yükü	GCS	Uniform	-0.22	1.000	Length		0.000
LF1431	Topukluk26	Wind	X	-0.22	0.000	Rela	From start	0.000
	Wx_Max - Rüzgar Yükü	GCS	Uniform	-0.22	1.000	Length		0.000
LF1432	Topukluk27	Wind	X	-0.22	0.000	Rela	From start	0.000
	Wx_Max - Rüzgar Yükü	GCS	Uniform	-0.22	1.000	Length		0.000
LF1433	Topukluk28	Wind	X	-0.22	0.000	Rela	From start	0.000
	Wx_Max - Rüzgar Yükü	GCS	Uniform	-0.22	1.000	Length		0.000
LF1434	Topukluk29	Wind	X	-0.22	0.000	Rela	From start	0.000
	Wx_Max - Rüzgar Yükü	GCS	Uniform	-0.22	1.000	Length		0.000
LF1435	Topukluk30	Wind	X	-0.23	0.000	Rela	From start	0.000
	Wx_Max - Rüzgar Yükü	GCS	Uniform	-0.23	1.000	Length		0.000
LF1436	Topukluk31	Wind	X	-0.23	0.000	Rela	From start	0.000
	Wx_Max - Rüzgar Yükü	GCS	Uniform	-0.23	1.000	Length		0.000
LF1437	Topukluk32	Wind	X	-0.23	0.000	Rela	From start	0.000
	Wx_Max - Rüzgar Yükü	GCS	Uniform	-0.23	1.000	Length		0.000
LF1438	Topukluk33	Wind	X	-0.23	0.000	Rela	From start	0.000
	Wx_Max - Rüzgar Yükü	GCS	Uniform	-0.23	1.000	Length		0.000
LF1439	Topukluk34	Wind	X	-0.23	0.000	Rela	From start	0.000
	Wx_Max - Rüzgar Yükü	GCS	Uniform	-0.23	1.000	Length		0.000
LF1440	Topukluk35	Wind	X	-0.23	0.000	Rela	From start	0.000
	Wx_Max - Rüzgar Yükü	GCS	Uniform	-0.23	1.000	Length		0.000
LF1441	Topukluk36	Wind	X	-0.23	0.000	Rela	From start	0.000
	Wx_Max - Rüzgar Yükü	GCS	Uniform	-0.23	1.000	Length		0.000
LF1442	Topukluk37	Wind	X	-0.23	0.000	Rela	From start	0.000
	Wx_Max - Rüzgar Yükü	GCS	Uniform	-0.23	1.000	Length		0.000
LF1443	Topukluk38	Wind	X	-0.23	0.000	Rela	From start	0.000
	Wx_Max - Rüzgar Yükü	GCS	Uniform	-0.23	1.000	Length		0.000
LF1444	Topukluk39	Wind	X	-0.23	0.000	Rela	From start	0.000
	Wx_Max - Rüzgar Yükü	GCS	Uniform	-0.23	1.000	Length		0.000
LF1445	Topukluk40	Wind	X	-0.24	0.000	Rela	From start	0.000
	Wx_Max - Rüzgar Yükü	GCS	Uniform	-0.24	1.000	Length		0.000
LF1446	Topukluk41	Wind	X	-0.24	0.000	Rela	From start	0.000
	Wx_Max - Rüzgar Yükü	GCS	Uniform	-0.24	1.000	Length		0.000
LF1447	Topukluk42	Wind	X	-0.24	0.000	Rela	From start	0.000
	Wx_Max - Rüzgar Yükü	GCS	Uniform	-0.24	1.000	Length		0.000
LF1448	Topukluk43	Wind	X	-0.24	0.000	Rela	From start	0.000
	Wx_Max - Rüzgar Yükü	GCS	Uniform	-0.24	1.000	Length		0.000
LF1449	Topukluk44	Wind	X	-0.24	0.000	Rela	From start	0.000
	Wx_Max - Rüzgar Yükü	GCS	Uniform	-0.24	1.000	Length		0.000
LF1450	Topukluk45	Wind	X	-0.24	0.000	Rela	From start	0.000
	Wx_Max - Rüzgar Yükü	GCS	Uniform	-0.24	1.000	Length		0.000
LF1451	Topukluk46	Wind	X	-0.24	0.000	Rela	From start	0.000
	Wx_Max - Rüzgar Yükü	GCS	Uniform	-0.24	1.000	Length		0.000
LF1452	Topukluk47	Wind	X	-0.24	0.000	Rela	From start	0.000
	Wx_Max - Rüzgar Yükü	GCS	Uniform	-0.24	1.000	Length		0.000
LF1453	Topukluk48	Wind	X	-0.24	0.000	Rela	From start	0.000
	Wx_Max - Rüzgar Yükü	GCS	Uniform	-0.24	1.000	Length		0.000
LF1454	Topukluk49	Wind	X	-0.24	0.000	Rela	From start	0.000
	Wx_Max - Rüzgar Yükü	GCS	Uniform	-0.24	1.000	Length		0.000
LF1455	Topukluk50	Wind	X	-0.24	0.000	Rela	From start	0.000
	Wx_Max - Rüzgar Yükü	GCS	Uniform	-0.24	1.000	Length		0.000
LF1456	Topukluk51	Wind	X	-0.24	0.000	Rela	From start	0.000
	Wx_Max - Rüzgar Yükü	GCS	Uniform	-0.24	1.000	Length		0.000
LF1457	Topukluk52	Wind	X	-0.24	0.000	Rela	From start	0.000

Name	Member	Type	Dir	Value - P_1 [kN/m]	Pos x_1	Coor	Orig	Ecc ey [cm]
	Load case	System	Distribution	Value - P_2 [kN/m]	Pos x_2	Loc		Ecc ez [cm]
	Wx_Max - Rüzgar Yükü	GCS	Uniform	-0.24	1.000	Length		0.000
LF1458	Topukluk53	Wind	X	-0.24	0.000	Rela	From start	0.000
	Wx_Max - Rüzgar Yükü	GCS	Uniform	-0.24	1.000	Length		0.000
LF1459	Topukluk54	Wind	X	-0.24	0.000	Rela	From start	0.000
	Wx_Max - Rüzgar Yükü	GCS	Uniform	-0.24	1.000	Length		0.000
LF1460	Topukluk55	Wind	X	-0.24	0.000	Rela	From start	0.000
	Wx_Max - Rüzgar Yükü	GCS	Uniform	-0.24	1.000	Length		0.000
LF1461	Topukluk56	Wind	X	-0.24	0.000	Rela	From start	0.000
	Wx_Max - Rüzgar Yükü	GCS	Uniform	-0.24	1.000	Length		0.000
LF1462	Topukluk57	Wind	X	-0.24	0.000	Rela	From start	0.000
	Wx_Max - Rüzgar Yükü	GCS	Uniform	-0.24	1.000	Length		0.000
LF1463	Topukluk58	Wind	X	-0.24	0.000	Rela	From start	0.000
	Wx_Max - Rüzgar Yükü	GCS	Uniform	-0.24	1.000	Length		0.000
LF1464	Topukluk59	Wind	X	-0.24	0.000	Rela	From start	0.000
	Wx_Max - Rüzgar Yükü	GCS	Uniform	-0.24	1.000	Length		0.000
LF1465	Topukluk60	Wind	X	-0.25	0.000	Rela	From start	0.000
	Wx_Max - Rüzgar Yükü	GCS	Uniform	-0.25	1.000	Length		0.000
LF1466	Topukluk61	Wind	X	-0.25	0.000	Rela	From start	0.000
	Wx_Max - Rüzgar Yükü	GCS	Uniform	-0.25	1.000	Length		0.000
LF1467	Topukluk62	Wind	X	-0.25	0.000	Rela	From start	0.000
	Wx_Max - Rüzgar Yükü	GCS	Uniform	-0.25	1.000	Length		0.000
LF1468	Topukluk63	Wind	X	-0.25	0.000	Rela	From start	0.000
	Wx_Max - Rüzgar Yükü	GCS	Uniform	-0.25	1.000	Length		0.000
LF1469	Topukluk64	Wind	X	-0.25	0.000	Rela	From start	0.000
	Wx_Max - Rüzgar Yükü	GCS	Uniform	-0.25	1.000	Length		0.000
LF1470	Topukluk65	Wind	X	-0.25	0.000	Rela	From start	0.000
	Wx_Max - Rüzgar Yükü	GCS	Uniform	-0.25	1.000	Length		0.000
LF1471	Topukluk66	Wind	X	-0.25	0.000	Rela	From start	0.000
	Wx_Max - Rüzgar Yükü	GCS	Uniform	-0.25	1.000	Length		0.000
LF1472	Topukluk67	Wind	X	-0.25	0.000	Rela	From start	0.000
	Wx_Max - Rüzgar Yükü	GCS	Uniform	-0.25	1.000	Length		0.000
LF1473	Topukluk68	Wind	X	-0.25	0.000	Rela	From start	0.000
	Wx_Max - Rüzgar Yükü	GCS	Uniform	-0.25	1.000	Length		0.000
LF1474	Topukluk69	Wind	X	-0.25	0.000	Rela	From start	0.000
	Wx_Max - Rüzgar Yükü	GCS	Uniform	-0.25	1.000	Length		0.000
LF1475	Topukluk70	Wind	X	-0.25	0.000	Rela	From start	0.000
	Wx_Max - Rüzgar Yükü	GCS	Uniform	-0.25	1.000	Length		0.000
LF1476	Topukluk71	Wind	X	-0.25	0.000	Rela	From start	0.000
	Wx_Max - Rüzgar Yükü	GCS	Uniform	-0.25	1.000	Length		0.000
LF1477	Topukluk72	Wind	X	-0.25	0.000	Rela	From start	0.000
	Wx_Max - Rüzgar Yükü	GCS	Uniform	-0.25	1.000	Length		0.000
LF1478	Topukluk73	Wind	X	-0.25	0.000	Rela	From start	0.000
	Wx_Max - Rüzgar Yükü	GCS	Uniform	-0.25	1.000	Length		0.000
LF1479	Topukluk74	Wind	X	-0.25	0.000	Rela	From start	0.000
	Wx_Max - Rüzgar Yükü	GCS	Uniform	-0.25	1.000	Length		0.000
LF1480	Topukluk75	Wind	X	-0.25	0.000	Rela	From start	0.000
	Wx_Max - Rüzgar Yükü	GCS	Uniform	-0.25	1.000	Length		0.000
LF1481	Topukluk76	Wind	X	-0.25	0.000	Rela	From start	0.000
	Wx_Max - Rüzgar Yükü	GCS	Uniform	-0.25	1.000	Length		0.000
LF1482	Topukluk77	Wind	X	-0.25	0.000	Rela	From start	0.000
	Wx_Max - Rüzgar Yükü	GCS	Uniform	-0.25	1.000	Length		0.000
LF1483	Topukluk78	Wind	X	-0.25	0.000	Rela	From start	0.000
	Wx_Max - Rüzgar Yükü	GCS	Uniform	-0.25	1.000	Length		0.000
LF1484	Topukluk79	Wind	X	-0.25	0.000	Rela	From start	0.000
	Wx_Max - Rüzgar Yükü	GCS	Uniform	-0.25	1.000	Length		0.000
LF1485	Topukluk80	Wind	X	-0.26	0.000	Rela	From start	0.000
	Wx_Max - Rüzgar Yükü	GCS	Uniform	-0.26	1.000	Length		0.000
LF1486	Topukluk81	Wind	X	-0.26	0.000	Rela	From start	0.000
	Wx_Max - Rüzgar Yükü	GCS	Uniform	-0.26	1.000	Length		0.000
LF1487	Topukluk82	Wind	X	-0.26	0.000	Rela	From start	0.000
	Wx_Max - Rüzgar Yükü	GCS	Uniform	-0.26	1.000	Length		0.000
LF1488	Topukluk83	Wind	X	-0.26	0.000	Rela	From start	0.000
	Wx_Max - Rüzgar Yükü	GCS	Uniform	-0.26	1.000	Length		0.000
LF1489	Topukluk84	Wind	X	-0.26	0.000	Rela	From start	0.000
	Wx_Max - Rüzgar Yükü	GCS	Uniform	-0.26	1.000	Length		0.000
LF1490	Topukluk85	Wind	X	-0.26	0.000	Rela	From start	0.000
	Wx_Max - Rüzgar Yükü	GCS	Uniform	-0.26	1.000	Length		0.000
LF1491	Topukluk86	Wind	X	-0.26	0.000	Rela	From start	0.000
	Wx_Max - Rüzgar Yükü	GCS	Uniform	-0.26	1.000	Length		0.000
LF1492	Topukluk87	Wind	X	-0.26	0.000	Rela	From start	0.000
	Wx_Max - Rüzgar Yükü	GCS	Uniform	-0.26	1.000	Length		0.000
LF1493	Topukluk88	Wind	X	-0.26	0.000	Rela	From start	0.000
	Wx_Max - Rüzgar Yükü	GCS	Uniform	-0.26	1.000	Length		0.000
LF1494	Topukluk89	Wind	X	-0.26	0.000	Rela	From start	0.000

Name	Member	Type	Dir	Value - P_1 [kN/m]	Pos x_1	Coor	Orig	Ecc ey [cm]
	Load case	System	Distribution	Value - P_2 [kN/m]	Pos x_2	Loc		Ecc ez [cm]
	Wx_Max - Rüzgar Yükü	GCS	Uniform	-0.26	1.000	Length		0.000
LF1495	Topukluk90	Wind	X	-0.27	0.000	Rela	From start	0.000
	Wx_Max - Rüzgar Yükü	GCS	Uniform	-0.27	1.000	Length		0.000
LF1496	Topukluk91	Wind	X	-0.27	0.000	Rela	From start	0.000
	Wx_Max - Rüzgar Yükü	GCS	Uniform	-0.27	1.000	Length		0.000
LF1497	Topukluk92	Wind	X	-0.27	0.000	Rela	From start	0.000
	Wx_Max - Rüzgar Yükü	GCS	Uniform	-0.27	1.000	Length		0.000
LF1498	Topukluk93	Wind	X	-0.27	0.000	Rela	From start	0.000
	Wx_Max - Rüzgar Yükü	GCS	Uniform	-0.27	1.000	Length		0.000
LF1499	Topukluk94	Wind	X	-0.27	0.000	Rela	From start	0.000
	Wx_Max - Rüzgar Yükü	GCS	Uniform	-0.27	1.000	Length		0.000
LF1500	Topukluk95	Wind	X	-0.27	0.000	Rela	From start	0.000
	Wx_Max - Rüzgar Yükü	GCS	Uniform	-0.27	1.000	Length		0.000
LF1501	Topukluk96	Wind	X	-0.27	0.000	Rela	From start	0.000
	Wx_Max - Rüzgar Yükü	GCS	Uniform	-0.27	1.000	Length		0.000
LF1502	Topukluk97	Wind	X	-0.27	0.000	Rela	From start	0.000
	Wx_Max - Rüzgar Yükü	GCS	Uniform	-0.27	1.000	Length		0.000
LF1503	Topukluk98	Wind	X	-0.27	0.000	Rela	From start	0.000
	Wx_Max - Rüzgar Yükü	GCS	Uniform	-0.27	1.000	Length		0.000
LF1504	Topukluk99	Wind	X	-0.27	0.000	Rela	From start	0.000
	Wx_Max - Rüzgar Yükü	GCS	Uniform	-0.27	1.000	Length		0.000
LF1505	Topukluk100	Wind	X	-0.27	0.000	Rela	From start	0.000
	Wx_Max - Rüzgar Yükü	GCS	Uniform	-0.27	1.000	Length		0.000
LF1506	Topukluk101	Wind	X	-0.27	0.000	Rela	From start	0.000
	Wx_Max - Rüzgar Yükü	GCS	Uniform	-0.27	1.000	Length		0.000
LF1507	Topukluk102	Wind	X	-0.27	0.000	Rela	From start	0.000
	Wx_Max - Rüzgar Yükü	GCS	Uniform	-0.27	1.000	Length		0.000
LF1508	Topukluk103	Wind	X	-0.27	0.000	Rela	From start	0.000
	Wx_Max - Rüzgar Yükü	GCS	Uniform	-0.27	1.000	Length		0.000
LF1509	Topukluk104	Wind	X	-0.27	0.000	Rela	From start	0.000
	Wx_Max - Rüzgar Yükü	GCS	Uniform	-0.27	1.000	Length		0.000
LF1510	Topukluk105	Wind	X	-0.27	0.000	Rela	From start	0.000
	Wx_Max - Rüzgar Yükü	GCS	Uniform	-0.27	1.000	Length		0.000
LF1511	Topukluk106	Wind	X	-0.27	0.000	Rela	From start	0.000
	Wx_Max - Rüzgar Yükü	GCS	Uniform	-0.27	1.000	Length		0.000
LF1512	Topukluk107	Wind	X	-0.27	0.000	Rela	From start	0.000
	Wx_Max - Rüzgar Yükü	GCS	Uniform	-0.27	1.000	Length		0.000
LF1513	Topukluk108	Wind	X	-0.27	0.000	Rela	From start	0.000
	Wx_Max - Rüzgar Yükü	GCS	Uniform	-0.27	1.000	Length		0.000
LF1514	Topukluk109	Wind	X	-0.27	0.000	Rela	From start	0.000
	Wx_Max - Rüzgar Yükü	GCS	Uniform	-0.27	1.000	Length		0.000
LF1515	Topukluk110	Wind	X	-0.28	0.000	Rela	From start	0.000
	Wx_Max - Rüzgar Yükü	GCS	Uniform	-0.28	1.000	Length		0.000
LF1516	Topukluk111	Wind	X	-0.28	0.000	Rela	From start	0.000
	Wx_Max - Rüzgar Yükü	GCS	Uniform	-0.28	1.000	Length		0.000
LF1517	Topukluk112	Wind	X	-0.28	0.000	Rela	From start	0.000
	Wx_Max - Rüzgar Yükü	GCS	Uniform	-0.28	1.000	Length		0.000
LF1518	Topukluk113	Wind	X	-0.28	0.000	Rela	From start	0.000
	Wx_Max - Rüzgar Yükü	GCS	Uniform	-0.28	1.000	Length		0.000
LF1519	Topukluk114	Wind	X	-0.28	0.000	Rela	From start	0.000
	Wx_Max - Rüzgar Yükü	GCS	Uniform	-0.28	1.000	Length		0.000
LF1520	Topukluk115	Wind	X	-0.28	0.000	Rela	From start	0.000
	Wx_Max - Rüzgar Yükü	GCS	Uniform	-0.28	1.000	Length		0.000
LF1521	Topukluk116	Wind	X	-0.28	0.000	Rela	From start	0.000
	Wx_Max - Rüzgar Yükü	GCS	Uniform	-0.28	1.000	Length		0.000
LF1522	Topukluk117	Wind	X	-0.28	0.000	Rela	From start	0.000
	Wx_Max - Rüzgar Yükü	GCS	Uniform	-0.28	1.000	Length		0.000
LF1523	Topukluk118	Wind	X	-0.28	0.000	Rela	From start	0.000
	Wx_Max - Rüzgar Yükü	GCS	Uniform	-0.28	1.000	Length		0.000
LF1524	Topukluk119	Wind	X	-0.28	0.000	Rela	From start	0.000
	Wx_Max - Rüzgar Yükü	GCS	Uniform	-0.28	1.000	Length		0.000
LF1525	Topukluk	Force	X	-0.05	0.000	Rela	From start	0.000
	Wx_Çalışma - Rüzgar Yükü	GCS	Uniform		1.000	Length		0.000
LF1526	Topukluk1	Force	X	-0.05	0.000	Rela	From start	0.000
	Wx_Çalışma - Rüzgar Yükü	GCS	Uniform		1.000	Length		0.000
LF1527	Topukluk2	Force	X	-0.05	0.000	Rela	From start	0.000
	Wx_Çalışma - Rüzgar Yükü	GCS	Uniform		1.000	Length		0.000
LF1528	Topukluk3	Force	X	-0.05	0.000	Rela	From start	0.000
	Wx_Çalışma - Rüzgar Yükü	GCS	Uniform		1.000	Length		0.000
LF1529	Topukluk4	Force	X	-0.05	0.000	Rela	From start	0.000
	Wx_Çalışma - Rüzgar Yükü	GCS	Uniform		1.000	Length		0.000
LF1530	Topukluk5	Force	X	-0.05	0.000	Rela	From start	0.000
	Wx_Çalışma - Rüzgar Yükü	GCS	Uniform		1.000	Length		0.000
LF1531	Topukluk6	Force	X	-0.05	0.000	Rela	From start	0.000

Name	Member	Type	Dir	Value - P_1 [kN/m]	Pos x_1	Coor	Orig	Ecc ey [cm]
	Load case	System	Distribution	Value - P_2 [kN/m]	Pos x_2	Loc		Ecc ez [cm]
	Wx_Çalışma - Rüzgar Yükü	GCS	Uniform		1.000	Length		0.000
LF1532	Topukluk7	Force	X	-0.05	0.000	Rela	From start	0.000
	Wx_Çalışma - Rüzgar Yükü	GCS	Uniform		1.000	Length		0.000
LF1533	Topukluk8	Force	X	-0.05	0.000	Rela	From start	0.000
	Wx_Çalışma - Rüzgar Yükü	GCS	Uniform		1.000	Length		0.000
LF1534	Topukluk9	Force	X	-0.05	0.000	Rela	From start	0.000
	Wx_Çalışma - Rüzgar Yükü	GCS	Uniform		1.000	Length		0.000
LF1535	Topukluk10	Force	X	-0.05	0.000	Rela	From start	0.000
	Wx_Çalışma - Rüzgar Yükü	GCS	Uniform		1.000	Length		0.000
LF1536	Topukluk11	Force	X	-0.05	0.000	Rela	From start	0.000
	Wx_Çalışma - Rüzgar Yükü	GCS	Uniform		1.000	Length		0.000
LF1537	Topukluk12	Force	X	-0.05	0.000	Rela	From start	0.000
	Wx_Çalışma - Rüzgar Yükü	GCS	Uniform		1.000	Length		0.000
LF1538	Topukluk13	Force	X	-0.05	0.000	Rela	From start	0.000
	Wx_Çalışma - Rüzgar Yükü	GCS	Uniform		1.000	Length		0.000
LF1539	Topukluk14	Force	X	-0.05	0.000	Rela	From start	0.000
	Wx_Çalışma - Rüzgar Yükü	GCS	Uniform		1.000	Length		0.000
LF1540	Topukluk15	Force	X	-0.05	0.000	Rela	From start	0.000
	Wx_Çalışma - Rüzgar Yükü	GCS	Uniform		1.000	Length		0.000
LF1541	Topukluk16	Force	X	-0.05	0.000	Rela	From start	0.000
	Wx_Çalışma - Rüzgar Yükü	GCS	Uniform		1.000	Length		0.000
LF1542	Topukluk17	Force	X	-0.05	0.000	Rela	From start	0.000
	Wx_Çalışma - Rüzgar Yükü	GCS	Uniform		1.000	Length		0.000
LF1543	Topukluk18	Force	X	-0.05	0.000	Rela	From start	0.000
	Wx_Çalışma - Rüzgar Yükü	GCS	Uniform		1.000	Length		0.000
LF1544	Topukluk19	Force	X	-0.05	0.000	Rela	From start	0.000
	Wx_Çalışma - Rüzgar Yükü	GCS	Uniform		1.000	Length		0.000
LF1545	Topukluk20	Force	X	-0.05	0.000	Rela	From start	0.000
	Wx_Çalışma - Rüzgar Yükü	GCS	Uniform		1.000	Length		0.000
LF1546	Topukluk21	Force	X	-0.05	0.000	Rela	From start	0.000
	Wx_Çalışma - Rüzgar Yükü	GCS	Uniform		1.000	Length		0.000
LF1547	Topukluk22	Force	X	-0.05	0.000	Rela	From start	0.000
	Wx_Çalışma - Rüzgar Yükü	GCS	Uniform		1.000	Length		0.000
LF1548	Topukluk23	Force	X	-0.05	0.000	Rela	From start	0.000
	Wx_Çalışma - Rüzgar Yükü	GCS	Uniform		1.000	Length		0.000
LF1549	Topukluk24	Force	X	-0.05	0.000	Rela	From start	0.000
	Wx_Çalışma - Rüzgar Yükü	GCS	Uniform		1.000	Length		0.000
LF1550	Topukluk25	Force	X	-0.05	0.000	Rela	From start	0.000
	Wx_Çalışma - Rüzgar Yükü	GCS	Uniform		1.000	Length		0.000
LF1551	Topukluk26	Force	X	-0.05	0.000	Rela	From start	0.000
	Wx_Çalışma - Rüzgar Yükü	GCS	Uniform		1.000	Length		0.000
LF1552	Topukluk27	Force	X	-0.05	0.000	Rela	From start	0.000
	Wx_Çalışma - Rüzgar Yükü	GCS	Uniform		1.000	Length		0.000
LF1553	Topukluk28	Force	X	-0.05	0.000	Rela	From start	0.000
	Wx_Çalışma - Rüzgar Yükü	GCS	Uniform		1.000	Length		0.000
LF1554	Topukluk29	Force	X	-0.05	0.000	Rela	From start	0.000
	Wx_Çalışma - Rüzgar Yükü	GCS	Uniform		1.000	Length		0.000
LF1555	Topukluk30	Force	X	-0.05	0.000	Rela	From start	0.000
	Wx_Çalışma - Rüzgar Yükü	GCS	Uniform		1.000	Length		0.000
LF1556	Topukluk31	Force	X	-0.05	0.000	Rela	From start	0.000
	Wx_Çalışma - Rüzgar Yükü	GCS	Uniform		1.000	Length		0.000
LF1557	Topukluk32	Force	X	-0.05	0.000	Rela	From start	0.000
	Wx_Çalışma - Rüzgar Yükü	GCS	Uniform		1.000	Length		0.000
LF1558	Topukluk33	Force	X	-0.05	0.000	Rela	From start	0.000
	Wx_Çalışma - Rüzgar Yükü	GCS	Uniform		1.000	Length		0.000
LF1559	Topukluk34	Force	X	-0.05	0.000	Rela	From start	0.000
	Wx_Çalışma - Rüzgar Yükü	GCS	Uniform		1.000	Length		0.000
LF1560	Topukluk35	Force	X	-0.05	0.000	Rela	From start	0.000
	Wx_Çalışma - Rüzgar Yükü	GCS	Uniform		1.000	Length		0.000
LF1561	Topukluk36	Force	X	-0.05	0.000	Rela	From start	0.000
	Wx_Çalışma - Rüzgar Yükü	GCS	Uniform		1.000	Length		0.000
LF1562	Topukluk37	Force	X	-0.05	0.000	Rela	From start	0.000
	Wx_Çalışma - Rüzgar Yükü	GCS	Uniform		1.000	Length		0.000
LF1563	Topukluk38	Force	X	-0.05	0.000	Rela	From start	0.000
	Wx_Çalışma - Rüzgar Yükü	GCS	Uniform		1.000	Length		0.000
LF1564	Topukluk39	Force	X	-0.05	0.000	Rela	From start	0.000
	Wx_Çalışma - Rüzgar Yükü	GCS	Uniform		1.000	Length		0.000
LF1565	Topukluk40	Force	X	-0.05	0.000	Rela	From start	0.000
	Wx_Çalışma - Rüzgar Yükü	GCS	Uniform		1.000	Length		0.000
LF1566	Topukluk41	Force	X	-0.05	0.000	Rela	From start	0.000
	Wx_Çalışma - Rüzgar Yükü	GCS	Uniform		1.000	Length		0.000
LF1567	Topukluk42	Force	X	-0.05	0.000	Rela	From start	0.000
	Wx_Çalışma - Rüzgar Yükü	GCS	Uniform		1.000	Length		0.000
LF1568	Topukluk43	Force	X	-0.05	0.000	Rela	From start	0.000

Name	Member	Type	Dir	Value - P_1 [kN/m]	Pos x_1	Coor	Orig	Ecc ey [cm]
	Load case	System	Distribution	Value - P_2 [kN/m]	Pos x_2	Loc		Ecc ez [cm]
	Wx_Çalışma - Rüzgar Yükü	GCS	Uniform		1.000	Length		0.000
LF1569	Topukluk44	Force	X	-0.05	0.000	Rela	From start	0.000
	Wx_Çalışma - Rüzgar Yükü	GCS	Uniform		1.000	Length		0.000
LF1570	Topukluk45	Force	X	-0.05	0.000	Rela	From start	0.000
	Wx_Çalışma - Rüzgar Yükü	GCS	Uniform		1.000	Length		0.000
LF1571	Topukluk46	Force	X	-0.05	0.000	Rela	From start	0.000
	Wx_Çalışma - Rüzgar Yükü	GCS	Uniform		1.000	Length		0.000
LF1572	Topukluk47	Force	X	-0.05	0.000	Rela	From start	0.000
	Wx_Çalışma - Rüzgar Yükü	GCS	Uniform		1.000	Length		0.000
LF1573	Topukluk48	Force	X	-0.05	0.000	Rela	From start	0.000
	Wx_Çalışma - Rüzgar Yükü	GCS	Uniform		1.000	Length		0.000
LF1574	Topukluk49	Force	X	-0.05	0.000	Rela	From start	0.000
	Wx_Çalışma - Rüzgar Yükü	GCS	Uniform		1.000	Length		0.000
LF1575	Topukluk50	Force	X	-0.05	0.000	Rela	From start	0.000
	Wx_Çalışma - Rüzgar Yükü	GCS	Uniform		1.000	Length		0.000
LF1576	Topukluk51	Force	X	-0.05	0.000	Rela	From start	0.000
	Wx_Çalışma - Rüzgar Yükü	GCS	Uniform		1.000	Length		0.000
LF1577	Topukluk52	Force	X	-0.05	0.000	Rela	From start	0.000
	Wx_Çalışma - Rüzgar Yükü	GCS	Uniform		1.000	Length		0.000
LF1578	Topukluk53	Force	X	-0.05	0.000	Rela	From start	0.000
	Wx_Çalışma - Rüzgar Yükü	GCS	Uniform		1.000	Length		0.000
LF1579	Topukluk54	Force	X	-0.05	0.000	Rela	From start	0.000
	Wx_Çalışma - Rüzgar Yükü	GCS	Uniform		1.000	Length		0.000
LF1580	Topukluk55	Force	X	-0.05	0.000	Rela	From start	0.000
	Wx_Çalışma - Rüzgar Yükü	GCS	Uniform		1.000	Length		0.000
LF1581	Topukluk56	Force	X	-0.05	0.000	Rela	From start	0.000
	Wx_Çalışma - Rüzgar Yükü	GCS	Uniform		1.000	Length		0.000
LF1582	Topukluk57	Force	X	-0.05	0.000	Rela	From start	0.000
	Wx_Çalışma - Rüzgar Yükü	GCS	Uniform		1.000	Length		0.000
LF1583	Topukluk58	Force	X	-0.05	0.000	Rela	From start	0.000
	Wx_Çalışma - Rüzgar Yükü	GCS	Uniform		1.000	Length		0.000
LF1584	Topukluk59	Force	X	-0.05	0.000	Rela	From start	0.000
	Wx_Çalışma - Rüzgar Yükü	GCS	Uniform		1.000	Length		0.000
LF1585	Topukluk60	Force	X	-0.05	0.000	Rela	From start	0.000
	Wx_Çalışma - Rüzgar Yükü	GCS	Uniform		1.000	Length		0.000
LF1586	Topukluk61	Force	X	-0.05	0.000	Rela	From start	0.000
	Wx_Çalışma - Rüzgar Yükü	GCS	Uniform		1.000	Length		0.000
LF1587	Topukluk62	Force	X	-0.05	0.000	Rela	From start	0.000
	Wx_Çalışma - Rüzgar Yükü	GCS	Uniform		1.000	Length		0.000
LF1588	Topukluk63	Force	X	-0.05	0.000	Rela	From start	0.000
	Wx_Çalışma - Rüzgar Yükü	GCS	Uniform		1.000	Length		0.000
LF1589	Topukluk64	Force	X	-0.05	0.000	Rela	From start	0.000
	Wx_Çalışma - Rüzgar Yükü	GCS	Uniform		1.000	Length		0.000
LF1590	Topukluk65	Force	X	-0.05	0.000	Rela	From start	0.000
	Wx_Çalışma - Rüzgar Yükü	GCS	Uniform		1.000	Length		0.000
LF1591	Topukluk66	Force	X	-0.05	0.000	Rela	From start	0.000
	Wx_Çalışma - Rüzgar Yükü	GCS	Uniform		1.000	Length		0.000
LF1592	Topukluk67	Force	X	-0.05	0.000	Rela	From start	0.000
	Wx_Çalışma - Rüzgar Yükü	GCS	Uniform		1.000	Length		0.000
LF1593	Topukluk68	Force	X	-0.05	0.000	Rela	From start	0.000
	Wx_Çalışma - Rüzgar Yükü	GCS	Uniform		1.000	Length		0.000
LF1594	Topukluk69	Force	X	-0.05	0.000	Rela	From start	0.000
	Wx_Çalışma - Rüzgar Yükü	GCS	Uniform		1.000	Length		0.000
LF1595	Topukluk70	Force	X	-0.05	0.000	Rela	From start	0.000
	Wx_Çalışma - Rüzgar Yükü	GCS	Uniform		1.000	Length		0.000
LF1596	Topukluk71	Force	X	-0.05	0.000	Rela	From start	0.000
	Wx_Çalışma - Rüzgar Yükü	GCS	Uniform		1.000	Length		0.000
LF1597	Topukluk72	Force	X	-0.05	0.000	Rela	From start	0.000
	Wx_Çalışma - Rüzgar Yükü	GCS	Uniform		1.000	Length		0.000
LF1598	Topukluk73	Force	X	-0.05	0.000	Rela	From start	0.000
	Wx_Çalışma - Rüzgar Yükü	GCS	Uniform		1.000	Length		0.000
LF1599	Topukluk74	Force	X	-0.05	0.000	Rela	From start	0.000
	Wx_Çalışma - Rüzgar Yükü	GCS	Uniform		1.000	Length		0.000
LF1600	Topukluk75	Force	X	-0.05	0.000	Rela	From start	0.000
	Wx_Çalışma - Rüzgar Yükü	GCS	Uniform		1.000	Length		0.000
LF1601	Topukluk76	Force	X	-0.05	0.000	Rela	From start	0.000
	Wx_Çalışma - Rüzgar Yükü	GCS	Uniform		1.000	Length		0.000
LF1602	Topukluk77	Force	X	-0.05	0.000	Rela	From start	0.000
	Wx_Çalışma - Rüzgar Yükü	GCS	Uniform		1.000	Length		0.000
LF1603	Topukluk78	Force	X	-0.05	0.000	Rela	From start	0.000
	Wx_Çalışma - Rüzgar Yükü	GCS	Uniform		1.000	Length		0.000
LF1604	Topukluk79	Force	X	-0.05	0.000	Rela	From start	0.000
	Wx_Çalışma - Rüzgar Yükü	GCS	Uniform		1.000	Length		0.000
LF1605	Topukluk80	Force	X	-0.05	0.000	Rela	From start	0.000

Name	Member	Type	Dir	Value - P_1 [kN/m]	Pos x_1	Coor	Orig	Ecc ey [cm]
	Load case	System	Distribution	Value - P_2 [kN/m]	Pos x_2	Loc		Ecc ez [cm]
	Wx_Çalışma - Rüzgar Yükü	GCS	Uniform		1.000	Length		0.000
LF1606	Topukluk81	Force	X	-0.05	0.000	Rela	From start	0.000
	Wx_Çalışma - Rüzgar Yükü	GCS	Uniform		1.000	Length		0.000
LF1607	Topukluk82	Force	X	-0.05	0.000	Rela	From start	0.000
	Wx_Çalışma - Rüzgar Yükü	GCS	Uniform		1.000	Length		0.000
LF1608	Topukluk83	Force	X	-0.05	0.000	Rela	From start	0.000
	Wx_Çalışma - Rüzgar Yükü	GCS	Uniform		1.000	Length		0.000
LF1609	Topukluk84	Force	X	-0.05	0.000	Rela	From start	0.000
	Wx_Çalışma - Rüzgar Yükü	GCS	Uniform		1.000	Length		0.000
LF1610	Topukluk85	Force	X	-0.05	0.000	Rela	From start	0.000
	Wx_Çalışma - Rüzgar Yükü	GCS	Uniform		1.000	Length		0.000
LF1611	Topukluk86	Force	X	-0.05	0.000	Rela	From start	0.000
	Wx_Çalışma - Rüzgar Yükü	GCS	Uniform		1.000	Length		0.000
LF1612	Topukluk87	Force	X	-0.05	0.000	Rela	From start	0.000
	Wx_Çalışma - Rüzgar Yükü	GCS	Uniform		1.000	Length		0.000
LF1613	Topukluk88	Force	X	-0.05	0.000	Rela	From start	0.000
	Wx_Çalışma - Rüzgar Yükü	GCS	Uniform		1.000	Length		0.000
LF1614	Topukluk89	Force	X	-0.05	0.000	Rela	From start	0.000
	Wx_Çalışma - Rüzgar Yükü	GCS	Uniform		1.000	Length		0.000
LF1615	Topukluk90	Force	X	-0.05	0.000	Rela	From start	0.000
	Wx_Çalışma - Rüzgar Yükü	GCS	Uniform		1.000	Length		0.000
LF1616	Topukluk91	Force	X	-0.05	0.000	Rela	From start	0.000
	Wx_Çalışma - Rüzgar Yükü	GCS	Uniform		1.000	Length		0.000
LF1617	Topukluk92	Force	X	-0.05	0.000	Rela	From start	0.000
	Wx_Çalışma - Rüzgar Yükü	GCS	Uniform		1.000	Length		0.000
LF1618	Topukluk93	Force	X	-0.05	0.000	Rela	From start	0.000
	Wx_Çalışma - Rüzgar Yükü	GCS	Uniform		1.000	Length		0.000
LF1619	Topukluk94	Force	X	-0.05	0.000	Rela	From start	0.000
	Wx_Çalışma - Rüzgar Yükü	GCS	Uniform		1.000	Length		0.000
LF1620	Topukluk95	Force	X	-0.05	0.000	Rela	From start	0.000
	Wx_Çalışma - Rüzgar Yükü	GCS	Uniform		1.000	Length		0.000
LF1621	Topukluk96	Force	X	-0.05	0.000	Rela	From start	0.000
	Wx_Çalışma - Rüzgar Yükü	GCS	Uniform		1.000	Length		0.000
LF1622	Topukluk97	Force	X	-0.05	0.000	Rela	From start	0.000
	Wx_Çalışma - Rüzgar Yükü	GCS	Uniform		1.000	Length		0.000
LF1623	Topukluk98	Force	X	-0.05	0.000	Rela	From start	0.000
	Wx_Çalışma - Rüzgar Yükü	GCS	Uniform		1.000	Length		0.000
LF1624	Topukluk99	Force	X	-0.05	0.000	Rela	From start	0.000
	Wx_Çalışma - Rüzgar Yükü	GCS	Uniform		1.000	Length		0.000
LF1625	Topukluk100	Force	X	-0.05	0.000	Rela	From start	0.000
	Wx_Çalışma - Rüzgar Yükü	GCS	Uniform		1.000	Length		0.000
LF1626	Topukluk101	Force	X	-0.05	0.000	Rela	From start	0.000
	Wx_Çalışma - Rüzgar Yükü	GCS	Uniform		1.000	Length		0.000
LF1627	Topukluk102	Force	X	-0.05	0.000	Rela	From start	0.000
	Wx_Çalışma - Rüzgar Yükü	GCS	Uniform		1.000	Length		0.000
LF1628	Topukluk103	Force	X	-0.05	0.000	Rela	From start	0.000
	Wx_Çalışma - Rüzgar Yükü	GCS	Uniform		1.000	Length		0.000
LF1629	Topukluk104	Force	X	-0.05	0.000	Rela	From start	0.000
	Wx_Çalışma - Rüzgar Yükü	GCS	Uniform		1.000	Length		0.000
LF1630	Topukluk105	Force	X	-0.05	0.000	Rela	From start	0.000
	Wx_Çalışma - Rüzgar Yükü	GCS	Uniform		1.000	Length		0.000
LF1631	Topukluk106	Force	X	-0.05	0.000	Rela	From start	0.000
	Wx_Çalışma - Rüzgar Yükü	GCS	Uniform		1.000	Length		0.000
LF1632	Topukluk107	Force	X	-0.05	0.000	Rela	From start	0.000
	Wx_Çalışma - Rüzgar Yükü	GCS	Uniform		1.000	Length		0.000
LF1633	Topukluk108	Force	X	-0.05	0.000	Rela	From start	0.000
	Wx_Çalışma - Rüzgar Yükü	GCS	Uniform		1.000	Length		0.000
LF1634	Topukluk109	Force	X	-0.05	0.000	Rela	From start	0.000
	Wx_Çalışma - Rüzgar Yükü	GCS	Uniform		1.000	Length		0.000
LF1635	Topukluk110	Force	X	-0.05	0.000	Rela	From start	0.000
	Wx_Çalışma - Rüzgar Yükü	GCS	Uniform		1.000	Length		0.000
LF1636	Topukluk111	Force	X	-0.05	0.000	Rela	From start	0.000
	Wx_Çalışma - Rüzgar Yükü	GCS	Uniform		1.000	Length		0.000
LF1637	Topukluk112	Force	X	-0.05	0.000	Rela	From start	0.000
	Wx_Çalışma - Rüzgar Yükü	GCS	Uniform		1.000	Length		0.000
LF1638	Topukluk113	Force	X	-0.05	0.000	Rela	From start	0.000
	Wx_Çalışma - Rüzgar Yükü	GCS	Uniform		1.000	Length		0.000
LF1639	Topukluk114	Force	X	-0.05	0.000	Rela	From start	0.000
	Wx_Çalışma - Rüzgar Yükü	GCS	Uniform		1.000	Length		0.000
LF1640	Topukluk115	Force	X	-0.05	0.000	Rela	From start	0.000
	Wx_Çalışma - Rüzgar Yükü	GCS	Uniform		1.000	Length		0.000
LF1641	Topukluk116	Force	X	-0.05	0.000	Rela	From start	0.000
	Wx_Çalışma - Rüzgar Yükü	GCS	Uniform		1.000	Length		0.000
LF1642	Topukluk117	Force	X	-0.05	0.000	Rela	From start	0.000

Name	Member	Type	Dir	Value - P_1 [kN/m]	Pos x_1	Coor	Orig	Ecc ey [cm]
	Load case	System	Distribution	Value - P_2 [kN/m]	Pos x_2	Loc		Ecc ez [cm]
	Wx_Çalışma - Rüzgar Yükü	GCS	Uniform		1.000	Length		0.000
LF1643	Topukluk118	Force	X	-0.05	0.000	Rela	From start	0.000
	Wx_Çalışma - Rüzgar Yükü	GCS	Uniform		1.000	Length		0.000
LF1644	Topukluk119	Force	X	-0.05	0.000	Rela	From start	0.000
	Wx_Çalışma - Rüzgar Yükü	GCS	Uniform		1.000	Length		0.000
LF1645	C.Platform301	Force	Z	-0.96	0.000	Rela	From start	0.000
	S - Servis Yükü	GCS	Uniform		1.000	Length		0.000
LF1646	C.Platform303	Force	Z	-0.96	0.000	Rela	From start	0.000
	S - Servis Yükü	GCS	Uniform		1.000	Length		0.000
LF1647	C.Platform306	Force	Z	-0.96	0.000	Rela	From start	0.000
	S - Servis Yükü	GCS	Uniform		1.000	Length		0.000
LF1648	C.Platform309	Force	Z	-0.96	0.000	Rela	From start	0.000
	S - Servis Yükü	GCS	Uniform		1.000	Length		0.000
LF1649	C.Platform312	Force	Z	-0.96	0.000	Rela	From start	0.000
	S - Servis Yükü	GCS	Uniform		1.000	Length		0.000
LF1650	C.Platform315	Force	Z	-0.96	0.000	Rela	From start	0.000
	S - Servis Yükü	GCS	Uniform		1.000	Length		0.000
LF1651	C.Platform318	Force	Z	-0.96	0.000	Rela	From start	0.000
	S - Servis Yükü	GCS	Uniform		1.000	Length		0.000
LF1652	C.Platform321	Force	Z	-0.96	0.000	Rela	From start	0.000
	S - Servis Yükü	GCS	Uniform		1.000	Length		0.000
LF1653	C.Platform324	Force	Z	-0.96	0.000	Rela	From start	0.000
	S - Servis Yükü	GCS	Uniform		1.000	Length		0.000
LF1654	C.Platform327	Force	Z	-0.96	0.000	Rela	From start	0.000
	S - Servis Yükü	GCS	Uniform		1.000	Length		0.000
LF1655	C.Platform271	Force	Z	-0.48	0.000	Rela	From start	0.000
	S - Servis Yükü	GCS	Uniform		1.000	Length		0.000
LF1656	C.Platform273	Force	Z	-0.48	0.000	Rela	From start	0.000
	S - Servis Yükü	GCS	Uniform		1.000	Length		0.000
LF1657	C.Platform276	Force	Z	-0.48	0.000	Rela	From start	0.000
	S - Servis Yükü	GCS	Uniform		1.000	Length		0.000
LF1658	C.Platform279	Force	Z	-0.48	0.000	Rela	From start	0.000
	S - Servis Yükü	GCS	Uniform		1.000	Length		0.000
LF1659	C.Platform282	Force	Z	-0.48	0.000	Rela	From start	0.000
	S - Servis Yükü	GCS	Uniform		1.000	Length		0.000
LF1660	C.Platform285	Force	Z	-0.48	0.000	Rela	From start	0.000
	S - Servis Yükü	GCS	Uniform		1.000	Length		0.000
LF1661	C.Platform288	Force	Z	-0.48	0.000	Rela	From start	0.000
	S - Servis Yükü	GCS	Uniform		1.000	Length		0.000
LF1662	C.Platform291	Force	Z	-0.48	0.000	Rela	From start	0.000
	S - Servis Yükü	GCS	Uniform		1.000	Length		0.000
LF1663	C.Platform294	Force	Z	-0.48	0.000	Rela	From start	0.000
	S - Servis Yükü	GCS	Uniform		1.000	Length		0.000
LF1664	C.Platform297	Force	Z	-0.48	0.000	Rela	From start	0.000
	S - Servis Yükü	GCS	Uniform		1.000	Length		0.000
LF1665	C.Platform331	Force	Z	-0.48	0.000	Rela	From start	0.000
	S - Servis Yükü	GCS	Uniform		1.000	Length		0.000
LF1666	C.Platform333	Force	Z	-0.48	0.000	Rela	From start	0.000
	S - Servis Yükü	GCS	Uniform		1.000	Length		0.000
LF1667	C.Platform336	Force	Z	-0.48	0.000	Rela	From start	0.000
	S - Servis Yükü	GCS	Uniform		1.000	Length		0.000
LF1668	C.Platform339	Force	Z	-0.48	0.000	Rela	From start	0.000
	S - Servis Yükü	GCS	Uniform		1.000	Length		0.000
LF1669	C.Platform342	Force	Z	-0.48	0.000	Rela	From start	0.000
	S - Servis Yükü	GCS	Uniform		1.000	Length		0.000
LF1670	C.Platform345	Force	Z	-0.48	0.000	Rela	From start	0.000
	S - Servis Yükü	GCS	Uniform		1.000	Length		0.000
LF1671	C.Platform348	Force	Z	-0.48	0.000	Rela	From start	0.000
	S - Servis Yükü	GCS	Uniform		1.000	Length		0.000
LF1672	C.Platform351	Force	Z	-0.48	0.000	Rela	From start	0.000
	S - Servis Yükü	GCS	Uniform		1.000	Length		0.000
LF1673	C.Platform354	Force	Z	-0.48	0.000	Rela	From start	0.000
	S - Servis Yükü	GCS	Uniform		1.000	Length		0.000
LF1674	C.Platform357	Force	Z	-0.48	0.000	Rela	From start	0.000
	S - Servis Yükü	GCS	Uniform		1.000	Length		0.000
LF1675	110YKB191	Force	Y	0.01	0.000	Rela	From start	0.000
	Wy_Çalışma - Rüzgar Yükü	GCS	Uniform		1.000	Length		0.000
LF1676	110YKB191	Wind	Y	0.07	0.000	Rela	From start	0.000
	Wy_Max - Rüzgar Yükü	GCS	Uniform	0.07	1.000	Length		0.000
LF1677	300YKB360	Force	X	-0.01	0.000	Rela	From start	0.000
	Wx_Çalışma - Rüzgar Yükü	GCS	Uniform		1.000	Length		0.000
LF1678	300YKB360	Wind	X	-0.05	0.000	Rela	From start	0.000
	Wx_Max - Rüzgar Yükü	GCS	Uniform	-0.05	1.000	Length		0.000
LF1679	300YKB361	Force	X	-0.01	0.000	Rela	From start	0.000

Name	Member	Type	Dir	Value - P_1 [kN/m]	Pos x_1	Coor	Orig	Ecc ey [cm]
	Load case	System	Distribution	Value - P_2 [kN/m]	Pos x_2	Loc		Ecc ez [cm]
	Wx_Çalışma - Rüzgar Yükü	GCS	Uniform		1.000	Length		0.000
LF1680	300YKB361	Wind	X	-0.05	0.000	Rela	From start	0.000
	Wx_Max - Rüzgar Yükü	GCS	Uniform	-0.05	1.000	Length		0.000
LF1681	300YKB362	Force	X	-0.01	0.000	Rela	From start	0.000
	Wx_Çalışma - Rüzgar Yükü	GCS	Uniform		1.000	Length		0.000
LF1682	300YKB362	Wind	X	-0.05	0.000	Rela	From start	0.000
	Wx_Max - Rüzgar Yükü	GCS	Uniform	-0.05	1.000	Length		0.000
LF1683	300YKB363	Force	X	-0.01	0.000	Rela	From start	0.000
	Wx_Çalışma - Rüzgar Yükü	GCS	Uniform		1.000	Length		0.000
LF1684	300YKB363	Wind	X	-0.05	0.000	Rela	From start	0.000
	Wx_Max - Rüzgar Yükü	GCS	Uniform	-0.05	1.000	Length		0.000
LF1685	300YKB364	Force	X	-0.01	0.000	Rela	From start	0.000
	Wx_Çalışma - Rüzgar Yükü	GCS	Uniform		1.000	Length		0.000
LF1686	300YKB364	Wind	X	-0.05	0.000	Rela	From start	0.000
	Wx_Max - Rüzgar Yükü	GCS	Uniform	-0.05	1.000	Length		0.000
LF1687	300YKB365	Force	X	-0.01	0.000	Rela	From start	0.000
	Wx_Çalışma - Rüzgar Yükü	GCS	Uniform		1.000	Length		0.000
LF1688	300YKB365	Wind	X	-0.05	0.000	Rela	From start	0.000
	Wx_Max - Rüzgar Yükü	GCS	Uniform	-0.05	1.000	Length		0.000
LF1689	300YKB366	Force	X	-0.01	0.000	Rela	From start	0.000
	Wx_Çalışma - Rüzgar Yükü	GCS	Uniform		1.000	Length		0.000
LF1690	300YKB366	Wind	X	-0.05	0.000	Rela	From start	0.000
	Wx_Max - Rüzgar Yükü	GCS	Uniform	-0.05	1.000	Length		0.000
LF1691	300YKB367	Force	X	-0.01	0.000	Rela	From start	0.000
	Wx_Çalışma - Rüzgar Yükü	GCS	Uniform		1.000	Length		0.000
LF1692	300YKB367	Wind	X	-0.05	0.000	Rela	From start	0.000
	Wx_Max - Rüzgar Yükü	GCS	Uniform	-0.05	1.000	Length		0.000
LF1693	300YKB368	Force	X	-0.01	0.000	Rela	From start	0.000
	Wx_Çalışma - Rüzgar Yükü	GCS	Uniform		1.000	Length		0.000
LF1694	300YKB368	Wind	X	-0.05	0.000	Rela	From start	0.000
	Wx_Max - Rüzgar Yükü	GCS	Uniform	-0.05	1.000	Length		0.000
LF1695	300YKB369	Force	X	-0.01	0.000	Rela	From start	0.000
	Wx_Çalışma - Rüzgar Yükü	GCS	Uniform		1.000	Length		0.000
LF1696	300YKB369	Wind	X	-0.05	0.000	Rela	From start	0.000
	Wx_Max - Rüzgar Yükü	GCS	Uniform	-0.05	1.000	Length		0.000
LF1697	300YKB380	Force	X	-0.01	0.000	Rela	From start	0.000
	Wx_Çalışma - Rüzgar Yükü	GCS	Uniform		1.000	Length		0.000
LF1698	300YKB380	Wind	X	-0.05	0.000	Rela	From start	0.000
	Wx_Max - Rüzgar Yükü	GCS	Uniform	-0.05	1.000	Length		0.000
LF1699	300YKB382	Force	X	-0.01	0.000	Rela	From start	0.000
	Wx_Çalışma - Rüzgar Yükü	GCS	Uniform		1.000	Length		0.000
LF1700	300YKB382	Wind	X	-0.05	0.000	Rela	From start	0.000
	Wx_Max - Rüzgar Yükü	GCS	Uniform	-0.05	1.000	Length		0.000
LF1701	300YKB384	Force	X	-0.01	0.000	Rela	From start	0.000
	Wx_Çalışma - Rüzgar Yükü	GCS	Uniform		1.000	Length		0.000
LF1702	300YKB384	Wind	X	-0.05	0.000	Rela	From start	0.000
	Wx_Max - Rüzgar Yükü	GCS	Uniform	-0.05	1.000	Length		0.000
LF1703	300YKB386	Force	X	-0.01	0.000	Rela	From start	0.000
	Wx_Çalışma - Rüzgar Yükü	GCS	Uniform		1.000	Length		0.000
LF1704	300YKB386	Wind	X	-0.05	0.000	Rela	From start	0.000
	Wx_Max - Rüzgar Yükü	GCS	Uniform	-0.05	1.000	Length		0.000
LF1705	300YKB388	Force	X	-0.01	0.000	Rela	From start	0.000
	Wx_Çalışma - Rüzgar Yükü	GCS	Uniform		1.000	Length		0.000
LF1706	300YKB388	Wind	X	-0.05	0.000	Rela	From start	0.000
	Wx_Max - Rüzgar Yükü	GCS	Uniform	-0.05	1.000	Length		0.000
LF1707	300YKB390	Force	X	-0.01	0.000	Rela	From start	0.000
	Wx_Çalışma - Rüzgar Yükü	GCS	Uniform		1.000	Length		0.000
LF1708	300YKB390	Wind	X	-0.05	0.000	Rela	From start	0.000
	Wx_Max - Rüzgar Yükü	GCS	Uniform	-0.05	1.000	Length		0.000
LF1709	300YKB392	Force	X	-0.01	0.000	Rela	From start	0.000
	Wx_Çalışma - Rüzgar Yükü	GCS	Uniform		1.000	Length		0.000
LF1710	300YKB392	Wind	X	-0.05	0.000	Rela	From start	0.000
	Wx_Max - Rüzgar Yükü	GCS	Uniform	-0.05	1.000	Length		0.000
LF1711	300YKB394	Force	X	-0.01	0.000	Rela	From start	0.000
	Wx_Çalışma - Rüzgar Yükü	GCS	Uniform		1.000	Length		0.000
LF1712	300YKB394	Wind	X	-0.05	0.000	Rela	From start	0.000
	Wx_Max - Rüzgar Yükü	GCS	Uniform	-0.05	1.000	Length		0.000
LF1713	300YKB396	Force	X	-0.01	0.000	Rela	From start	0.000
	Wx_Çalışma - Rüzgar Yükü	GCS	Uniform		1.000	Length		0.000
LF1714	300YKB396	Wind	X	-0.05	0.000	Rela	From start	0.000
	Wx_Max - Rüzgar Yükü	GCS	Uniform	-0.05	1.000	Length		0.000
LF1715	300YKB398	Force	X	-0.01	0.000	Rela	From start	0.000
	Wx_Çalışma - Rüzgar Yükü	GCS	Uniform		1.000	Length		0.000
LF1716	300YKB398	Wind	X	-0.05	0.000	Rela	From start	0.000

Name	Member	Type	Dir	Value - P_1 [kN/m]	Pos x_1	Coor	Orig	Ecc ey [cm]
	Load case	System	Distribution	Value - P_2 [kN/m]	Pos x_2	Loc		Ecc ez [cm]
	Wx_Max - Rüzgar Yükü	GCS	Uniform	-0.05	1.000	Length		0.000
LF1717	300YKB400	Force	X	-0.01	0.000	Rela	From start	0.000
	Wx_Çalışma - Rüzgar Yükü	GCS	Uniform		1.000	Length		0.000
LF1718	300YKB400	Wind	X	-0.05	0.000	Rela	From start	0.000
	Wx_Max - Rüzgar Yükü	GCS	Uniform	-0.05	1.000	Length		0.000
LF1719	300YKB402	Force	X	-0.01	0.000	Rela	From start	0.000
	Wx_Çalışma - Rüzgar Yükü	GCS	Uniform		1.000	Length		0.000
LF1720	300YKB402	Wind	X	-0.05	0.000	Rela	From start	0.000
	Wx_Max - Rüzgar Yükü	GCS	Uniform	-0.05	1.000	Length		0.000
LF1721	300YKB404	Force	X	-0.01	0.000	Rela	From start	0.000
	Wx_Çalışma - Rüzgar Yükü	GCS	Uniform		1.000	Length		0.000
LF1722	300YKB404	Wind	X	-0.05	0.000	Rela	From start	0.000
	Wx_Max - Rüzgar Yükü	GCS	Uniform	-0.05	1.000	Length		0.000
LF1723	300YKB406	Force	X	-0.01	0.000	Rela	From start	0.000
	Wx_Çalışma - Rüzgar Yükü	GCS	Uniform		1.000	Length		0.000
LF1724	300YKB406	Wind	X	-0.05	0.000	Rela	From start	0.000
	Wx_Max - Rüzgar Yükü	GCS	Uniform	-0.05	1.000	Length		0.000
LF1725	300YKB408	Force	X	-0.01	0.000	Rela	From start	0.000
	Wx_Çalışma - Rüzgar Yükü	GCS	Uniform		1.000	Length		0.000
LF1726	300YKB408	Wind	X	-0.05	0.000	Rela	From start	0.000
	Wx_Max - Rüzgar Yükü	GCS	Uniform	-0.05	1.000	Length		0.000
LF1727	300YKB410	Force	X	-0.01	0.000	Rela	From start	0.000
	Wx_Çalışma - Rüzgar Yükü	GCS	Uniform		1.000	Length		0.000
LF1728	300YKB410	Wind	X	-0.05	0.000	Rela	From start	0.000
	Wx_Max - Rüzgar Yükü	GCS	Uniform	-0.05	1.000	Length		0.000
LF1729	300YKB412	Force	X	-0.01	0.000	Rela	From start	0.000
	Wx_Çalışma - Rüzgar Yükü	GCS	Uniform		1.000	Length		0.000
LF1730	300YKB412	Wind	X	-0.05	0.000	Rela	From start	0.000
	Wx_Max - Rüzgar Yükü	GCS	Uniform	-0.05	1.000	Length		0.000
LF1731	300YKB414	Force	X	-0.01	0.000	Rela	From start	0.000
	Wx_Çalışma - Rüzgar Yükü	GCS	Uniform		1.000	Length		0.000
LF1732	300YKB414	Wind	X	-0.05	0.000	Rela	From start	0.000
	Wx_Max - Rüzgar Yükü	GCS	Uniform	-0.05	1.000	Length		0.000
LF1733	300YKB416	Force	X	-0.01	0.000	Rela	From start	0.000
	Wx_Çalışma - Rüzgar Yükü	GCS	Uniform		1.000	Length		0.000
LF1734	300YKB416	Wind	X	-0.05	0.000	Rela	From start	0.000
	Wx_Max - Rüzgar Yükü	GCS	Uniform	-0.05	1.000	Length		0.000
LF1735	300YKB418	Force	X	-0.01	0.000	Rela	From start	0.000
	Wx_Çalışma - Rüzgar Yükü	GCS	Uniform		1.000	Length		0.000
LF1736	300YKB418	Wind	X	-0.05	0.000	Rela	From start	0.000
	Wx_Max - Rüzgar Yükü	GCS	Uniform	-0.05	1.000	Length		0.000
LF1737	300YKB420	Force	X	-0.01	0.000	Rela	From start	0.000
	Wx_Çalışma - Rüzgar Yükü	GCS	Uniform		1.000	Length		0.000
LF1738	300YKB420	Wind	X	-0.05	0.000	Rela	From start	0.000
	Wx_Max - Rüzgar Yükü	GCS	Uniform	-0.05	1.000	Length		0.000
LF1739	300YKB422	Force	X	-0.01	0.000	Rela	From start	0.000
	Wx_Çalışma - Rüzgar Yükü	GCS	Uniform		1.000	Length		0.000
LF1740	300YKB422	Wind	X	-0.05	0.000	Rela	From start	0.000
	Wx_Max - Rüzgar Yükü	GCS	Uniform	-0.05	1.000	Length		0.000
LF1741	300YKB424	Force	X	-0.01	0.000	Rela	From start	0.000
	Wx_Çalışma - Rüzgar Yükü	GCS	Uniform		1.000	Length		0.000
LF1742	300YKB424	Wind	X	-0.05	0.000	Rela	From start	0.000
	Wx_Max - Rüzgar Yükü	GCS	Uniform	-0.05	1.000	Length		0.000
LF1743	300YKB426	Force	X	-0.01	0.000	Rela	From start	0.000
	Wx_Çalışma - Rüzgar Yükü	GCS	Uniform		1.000	Length		0.000
LF1744	300YKB426	Wind	X	-0.05	0.000	Rela	From start	0.000
	Wx_Max - Rüzgar Yükü	GCS	Uniform	-0.05	1.000	Length		0.000
LF1745	300YKB428	Force	X	-0.01	0.000	Rela	From start	0.000
	Wx_Çalışma - Rüzgar Yükü	GCS	Uniform		1.000	Length		0.000
LF1746	300YKB428	Wind	X	-0.05	0.000	Rela	From start	0.000
	Wx_Max - Rüzgar Yükü	GCS	Uniform	-0.05	1.000	Length		0.000
LF1747	300YKB430	Force	X	-0.01	0.000	Rela	From start	0.000
	Wx_Çalışma - Rüzgar Yükü	GCS	Uniform		1.000	Length		0.000
LF1748	300YKB430	Wind	X	-0.05	0.000	Rela	From start	0.000
	Wx_Max - Rüzgar Yükü	GCS	Uniform	-0.05	1.000	Length		0.000
LF1749	300YKB432	Force	X	-0.01	0.000	Rela	From start	0.000
	Wx_Çalışma - Rüzgar Yükü	GCS	Uniform		1.000	Length		0.000
LF1750	300YKB432	Wind	X	-0.05	0.000	Rela	From start	0.000
	Wx_Max - Rüzgar Yükü	GCS	Uniform	-0.05	1.000	Length		0.000
LF1751	300YKB434	Force	X	-0.01	0.000	Rela	From start	0.000
	Wx_Çalışma - Rüzgar Yükü	GCS	Uniform		1.000	Length		0.000
LF1752	300YKB434	Wind	X	-0.05	0.000	Rela	From start	0.000
	Wx_Max - Rüzgar Yükü	GCS	Uniform	-0.05	1.000	Length		0.000
LF1753	300YKB436	Force	X	-0.01	0.000	Rela	From start	0.000

Name	Member	Type	Dir	Value - P_1 [kN/m]	Pos x_1	Coor	Orig	Ecc ey [cm]
	Load case	System	Distribution	Value - P_2 [kN/m]	Pos x_2	Loc		Ecc ez [cm]
	Wx_Çalışma - Rüzgar Yükü	GCS	Uniform		1.000	Length		0.000
LF1754	300YKB436	Wind	X	-0.05	0.000	Rela	From start	0.000
	Wx_Max - Rüzgar Yükü	GCS	Uniform	-0.05	1.000	Length		0.000
LF1755	300YKB438	Force	X	-0.01	0.000	Rela	From start	0.000
	Wx_Çalışma - Rüzgar Yükü	GCS	Uniform		1.000	Length		0.000
LF1756	300YKB438	Wind	X	-0.05	0.000	Rela	From start	0.000
	Wx_Max - Rüzgar Yükü	GCS	Uniform	-0.05	1.000	Length		0.000
LF1757	300YKB440	Force	X	-0.01	0.000	Rela	From start	0.000
	Wx_Çalışma - Rüzgar Yükü	GCS	Uniform		1.000	Length		0.000
LF1758	300YKB440	Wind	X	-0.06	0.000	Rela	From start	0.000
	Wx_Max - Rüzgar Yükü	GCS	Uniform	-0.06	1.000	Length		0.000
LF1759	300YKB442	Force	X	-0.01	0.000	Rela	From start	0.000
	Wx_Çalışma - Rüzgar Yükü	GCS	Uniform		1.000	Length		0.000
LF1760	300YKB442	Wind	X	-0.06	0.000	Rela	From start	0.000
	Wx_Max - Rüzgar Yükü	GCS	Uniform	-0.06	1.000	Length		0.000
LF1761	300YKB444	Force	X	-0.01	0.000	Rela	From start	0.000
	Wx_Çalışma - Rüzgar Yükü	GCS	Uniform		1.000	Length		0.000
LF1762	300YKB444	Wind	X	-0.06	0.000	Rela	From start	0.000
	Wx_Max - Rüzgar Yükü	GCS	Uniform	-0.06	1.000	Length		0.000
LF1763	300YKB446	Force	X	-0.01	0.000	Rela	From start	0.000
	Wx_Çalışma - Rüzgar Yükü	GCS	Uniform		1.000	Length		0.000
LF1764	300YKB446	Wind	X	-0.06	0.000	Rela	From start	0.000
	Wx_Max - Rüzgar Yükü	GCS	Uniform	-0.06	1.000	Length		0.000
LF1765	300YKB448	Force	X	-0.01	0.000	Rela	From start	0.000
	Wx_Çalışma - Rüzgar Yükü	GCS	Uniform		1.000	Length		0.000
LF1766	300YKB448	Wind	X	-0.06	0.000	Rela	From start	0.000
	Wx_Max - Rüzgar Yükü	GCS	Uniform	-0.06	1.000	Length		0.000
LF1767	300YKB450	Force	X	-0.01	0.000	Rela	From start	0.000
	Wx_Çalışma - Rüzgar Yükü	GCS	Uniform		1.000	Length		0.000
LF1768	300YKB450	Wind	X	-0.06	0.000	Rela	From start	0.000
	Wx_Max - Rüzgar Yükü	GCS	Uniform	-0.06	1.000	Length		0.000
LF1769	300YKB452	Force	X	-0.01	0.000	Rela	From start	0.000
	Wx_Çalışma - Rüzgar Yükü	GCS	Uniform		1.000	Length		0.000
LF1770	300YKB452	Wind	X	-0.06	0.000	Rela	From start	0.000
	Wx_Max - Rüzgar Yükü	GCS	Uniform	-0.06	1.000	Length		0.000
LF1771	300YKB454	Force	X	-0.01	0.000	Rela	From start	0.000
	Wx_Çalışma - Rüzgar Yükü	GCS	Uniform		1.000	Length		0.000
LF1772	300YKB454	Wind	X	-0.06	0.000	Rela	From start	0.000
	Wx_Max - Rüzgar Yükü	GCS	Uniform	-0.06	1.000	Length		0.000
LF1773	300YKB456	Force	X	-0.01	0.000	Rela	From start	0.000
	Wx_Çalışma - Rüzgar Yükü	GCS	Uniform		1.000	Length		0.000
LF1774	300YKB456	Wind	X	-0.06	0.000	Rela	From start	0.000
	Wx_Max - Rüzgar Yükü	GCS	Uniform	-0.06	1.000	Length		0.000
LF1775	300YKB458	Force	X	-0.01	0.000	Rela	From start	0.000
	Wx_Çalışma - Rüzgar Yükü	GCS	Uniform		1.000	Length		0.000
LF1776	300YKB458	Wind	X	-0.06	0.000	Rela	From start	0.000
	Wx_Max - Rüzgar Yükü	GCS	Uniform	-0.06	1.000	Length		0.000
LF1777	300YKB460	Force	X	-0.01	0.000	Rela	From start	0.000
	Wx_Çalışma - Rüzgar Yükü	GCS	Uniform		1.000	Length		0.000
LF1778	300YKB460	Wind	X	-0.06	0.000	Rela	From start	0.000
	Wx_Max - Rüzgar Yükü	GCS	Uniform	-0.06	1.000	Length		0.000
LF1779	300YKB462	Force	X	-0.01	0.000	Rela	From start	0.000
	Wx_Çalışma - Rüzgar Yükü	GCS	Uniform		1.000	Length		0.000
LF1780	300YKB462	Wind	X	-0.06	0.000	Rela	From start	0.000
	Wx_Max - Rüzgar Yükü	GCS	Uniform	-0.06	1.000	Length		0.000
LF1781	300YKB464	Force	X	-0.01	0.000	Rela	From start	0.000
	Wx_Çalışma - Rüzgar Yükü	GCS	Uniform		1.000	Length		0.000
LF1782	300YKB464	Wind	X	-0.06	0.000	Rela	From start	0.000
	Wx_Max - Rüzgar Yükü	GCS	Uniform	-0.06	1.000	Length		0.000
LF1783	300YKB466	Force	X	-0.01	0.000	Rela	From start	0.000
	Wx_Çalışma - Rüzgar Yükü	GCS	Uniform		1.000	Length		0.000
LF1784	300YKB466	Wind	X	-0.06	0.000	Rela	From start	0.000
	Wx_Max - Rüzgar Yükü	GCS	Uniform	-0.06	1.000	Length		0.000
LF1785	300YKB468	Force	X	-0.01	0.000	Rela	From start	0.000
	Wx_Çalışma - Rüzgar Yükü	GCS	Uniform		1.000	Length		0.000
LF1786	300YKB468	Wind	X	-0.06	0.000	Rela	From start	0.000
	Wx_Max - Rüzgar Yükü	GCS	Uniform	-0.06	1.000	Length		0.000
LF1787	300YKB470	Force	X	-0.01	0.000	Rela	From start	0.000
	Wx_Çalışma - Rüzgar Yükü	GCS	Uniform		1.000	Length		0.000
LF1788	300YKB470	Wind	X	-0.06	0.000	Rela	From start	0.000
	Wx_Max - Rüzgar Yükü	GCS	Uniform	-0.06	1.000	Length		0.000
LF1789	300YKB472	Force	X	-0.01	0.000	Rela	From start	0.000
	Wx_Çalışma - Rüzgar Yükü	GCS	Uniform		1.000	Length		0.000
LF1790	300YKB472	Wind	X	-0.06	0.000	Rela	From start	0.000

Name	Member	Type	Dir	Value - P_1 [kN/m]	Pos x_1	Coor	Orig	Ecc ey [cm]
	Load case	System	Distribution	Value - P_2 [kN/m]	Pos x_2	Loc		Ecc ez [cm]
	Wx_Max - Rüzgar Yükü	GCS	Uniform	-0.06	1.000	Length		0.000
LF1791	300YKB474	Force	X	-0.01	0.000	Rela	From start	0.000
	Wx_Çalışma - Rüzgar Yükü	GCS	Uniform		1.000	Length		0.000
LF1792	300YKB474	Wind	X	-0.06	0.000	Rela	From start	0.000
	Wx_Max - Rüzgar Yükü	GCS	Uniform	-0.06	1.000	Length		0.000
LF1793	300YKB476	Force	X	-0.01	0.000	Rela	From start	0.000
	Wx_Çalışma - Rüzgar Yükü	GCS	Uniform		1.000	Length		0.000
LF1794	300YKB476	Wind	X	-0.06	0.000	Rela	From start	0.000
	Wx_Max - Rüzgar Yükü	GCS	Uniform	-0.06	1.000	Length		0.000
LF1795	300YKB478	Force	X	-0.01	0.000	Rela	From start	0.000
	Wx_Çalışma - Rüzgar Yükü	GCS	Uniform		1.000	Length		0.000
LF1796	300YKB478	Wind	X	-0.06	0.000	Rela	From start	0.000
	Wx_Max - Rüzgar Yükü	GCS	Uniform	-0.06	1.000	Length		0.000
LF1797	300YKB480	Force	X	-0.01	0.000	Rela	From start	0.000
	Wx_Çalışma - Rüzgar Yükü	GCS	Uniform		1.000	Length		0.000
LF1798	300YKB480	Wind	X	-0.06	0.000	Rela	From start	0.000
	Wx_Max - Rüzgar Yükü	GCS	Uniform	-0.06	1.000	Length		0.000
LF1799	300YKB482	Force	X	-0.01	0.000	Rela	From start	0.000
	Wx_Çalışma - Rüzgar Yükü	GCS	Uniform		1.000	Length		0.000
LF1800	300YKB482	Wind	X	-0.06	0.000	Rela	From start	0.000
	Wx_Max - Rüzgar Yükü	GCS	Uniform	-0.06	1.000	Length		0.000
LF1801	300YKB484	Force	X	-0.01	0.000	Rela	From start	0.000
	Wx_Çalışma - Rüzgar Yükü	GCS	Uniform		1.000	Length		0.000
LF1802	300YKB484	Wind	X	-0.06	0.000	Rela	From start	0.000
	Wx_Max - Rüzgar Yükü	GCS	Uniform	-0.06	1.000	Length		0.000
LF1803	300YKB486	Force	X	-0.01	0.000	Rela	From start	0.000
	Wx_Çalışma - Rüzgar Yükü	GCS	Uniform		1.000	Length		0.000
LF1804	300YKB486	Wind	X	-0.06	0.000	Rela	From start	0.000
	Wx_Max - Rüzgar Yükü	GCS	Uniform	-0.06	1.000	Length		0.000
LF1805	300YKB488	Force	X	-0.01	0.000	Rela	From start	0.000
	Wx_Çalışma - Rüzgar Yükü	GCS	Uniform		1.000	Length		0.000
LF1806	300YKB488	Wind	X	-0.06	0.000	Rela	From start	0.000
	Wx_Max - Rüzgar Yükü	GCS	Uniform	-0.06	1.000	Length		0.000
LF1807	300YKB490	Force	X	-0.01	0.000	Rela	From start	0.000
	Wx_Çalışma - Rüzgar Yükü	GCS	Uniform		1.000	Length		0.000
LF1808	300YKB490	Wind	X	-0.06	0.000	Rela	From start	0.000
	Wx_Max - Rüzgar Yükü	GCS	Uniform	-0.06	1.000	Length		0.000
LF1809	300YKB492	Force	X	-0.01	0.000	Rela	From start	0.000
	Wx_Çalışma - Rüzgar Yükü	GCS	Uniform		1.000	Length		0.000
LF1810	300YKB492	Wind	X	-0.06	0.000	Rela	From start	0.000
	Wx_Max - Rüzgar Yükü	GCS	Uniform	-0.06	1.000	Length		0.000
LF1811	300YKB494	Force	X	-0.01	0.000	Rela	From start	0.000
	Wx_Çalışma - Rüzgar Yükü	GCS	Uniform		1.000	Length		0.000
LF1812	300YKB494	Wind	X	-0.06	0.000	Rela	From start	0.000
	Wx_Max - Rüzgar Yükü	GCS	Uniform	-0.06	1.000	Length		0.000
LF1813	300YKB496	Force	X	-0.01	0.000	Rela	From start	0.000
	Wx_Çalışma - Rüzgar Yükü	GCS	Uniform		1.000	Length		0.000
LF1814	300YKB496	Wind	X	-0.06	0.000	Rela	From start	0.000
	Wx_Max - Rüzgar Yükü	GCS	Uniform	-0.06	1.000	Length		0.000
LF1815	300YKB498	Force	X	-0.01	0.000	Rela	From start	0.000
	Wx_Çalışma - Rüzgar Yükü	GCS	Uniform		1.000	Length		0.000
LF1816	300YKB498	Wind	X	-0.06	0.000	Rela	From start	0.000
	Wx_Max - Rüzgar Yükü	GCS	Uniform	-0.06	1.000	Length		0.000
LF1817	300YKB500	Force	X	-0.01	0.000	Rela	From start	0.000
	Wx_Çalışma - Rüzgar Yükü	GCS	Uniform		1.000	Length		0.000
LF1818	300YKB500	Wind	X	-0.06	0.000	Rela	From start	0.000
	Wx_Max - Rüzgar Yükü	GCS	Uniform	-0.06	1.000	Length		0.000
LF1819	300YKB502	Force	X	-0.01	0.000	Rela	From start	0.000
	Wx_Çalışma - Rüzgar Yükü	GCS	Uniform		1.000	Length		0.000
LF1820	300YKB502	Wind	X	-0.06	0.000	Rela	From start	0.000
	Wx_Max - Rüzgar Yükü	GCS	Uniform	-0.06	1.000	Length		0.000
LF1821	300YKB504	Force	X	-0.01	0.000	Rela	From start	0.000
	Wx_Çalışma - Rüzgar Yükü	GCS	Uniform		1.000	Length		0.000
LF1822	300YKB504	Wind	X	-0.06	0.000	Rela	From start	0.000
	Wx_Max - Rüzgar Yükü	GCS	Uniform	-0.06	1.000	Length		0.000
LF1823	300YKB506	Force	X	-0.01	0.000	Rela	From start	0.000
	Wx_Çalışma - Rüzgar Yükü	GCS	Uniform		1.000	Length		0.000
LF1824	300YKB506	Wind	X	-0.06	0.000	Rela	From start	0.000
	Wx_Max - Rüzgar Yükü	GCS	Uniform	-0.06	1.000	Length		0.000
LF1825	300YKB508	Force	X	-0.01	0.000	Rela	From start	0.000
	Wx_Çalışma - Rüzgar Yükü	GCS	Uniform		1.000	Length		0.000
LF1826	300YKB508	Wind	X	-0.06	0.000	Rela	From start	0.000
	Wx_Max - Rüzgar Yükü	GCS	Uniform	-0.06	1.000	Length		0.000
LF1827	300YKB510	Force	X	-0.01	0.000	Rela	From start	0.000

Name	Member	Type	Dir	Value - P_1 [kN/m]	Pos x_1	Coor	Orig	Ecc ey [cm]
	Load case	System	Distribution	Value - P_2 [kN/m]	Pos x_2	Loc		Ecc ez [cm]
	Wx_Çalışma - Rüzgar Yükü	GCS	Uniform		1.000	Length		0.000
LF1828	300YKB510	Wind	X	-0.06	0.000	Rela	From start	0.000
	Wx_Max - Rüzgar Yükü	GCS	Uniform	-0.06	1.000	Length		0.000
LF1829	300YKB512	Force	X	-0.01	0.000	Rela	From start	0.000
	Wx_Çalışma - Rüzgar Yükü	GCS	Uniform		1.000	Length		0.000
LF1830	300YKB512	Wind	X	-0.06	0.000	Rela	From start	0.000
	Wx_Max - Rüzgar Yükü	GCS	Uniform	-0.06	1.000	Length		0.000
LF1831	300YKB514	Force	X	-0.01	0.000	Rela	From start	0.000
	Wx_Çalışma - Rüzgar Yükü	GCS	Uniform		1.000	Length		0.000
LF1832	300YKB514	Wind	X	-0.06	0.000	Rela	From start	0.000
	Wx_Max - Rüzgar Yükü	GCS	Uniform	-0.06	1.000	Length		0.000
LF1833	300YKB516	Force	X	-0.01	0.000	Rela	From start	0.000
	Wx_Çalışma - Rüzgar Yükü	GCS	Uniform		1.000	Length		0.000
LF1834	300YKB516	Wind	X	-0.06	0.000	Rela	From start	0.000
	Wx_Max - Rüzgar Yükü	GCS	Uniform	-0.06	1.000	Length		0.000
LF1835	300YKB518	Force	X	-0.01	0.000	Rela	From start	0.000
	Wx_Çalışma - Rüzgar Yükü	GCS	Uniform		1.000	Length		0.000
LF1836	300YKB518	Wind	X	-0.06	0.000	Rela	From start	0.000
	Wx_Max - Rüzgar Yükü	GCS	Uniform	-0.06	1.000	Length		0.000
LF1837	300YKB520	Force	X	-0.01	0.000	Rela	From start	0.000
	Wx_Çalışma - Rüzgar Yükü	GCS	Uniform		1.000	Length		0.000
LF1838	300YKB520	Wind	X	-0.06	0.000	Rela	From start	0.000
	Wx_Max - Rüzgar Yükü	GCS	Uniform	-0.06	1.000	Length		0.000
LF1839	300YKB522	Force	X	-0.01	0.000	Rela	From start	0.000
	Wx_Çalışma - Rüzgar Yükü	GCS	Uniform		1.000	Length		0.000
LF1840	300YKB522	Wind	X	-0.06	0.000	Rela	From start	0.000
	Wx_Max - Rüzgar Yükü	GCS	Uniform	-0.06	1.000	Length		0.000
LF1841	300YKB524	Force	X	-0.01	0.000	Rela	From start	0.000
	Wx_Çalışma - Rüzgar Yükü	GCS	Uniform		1.000	Length		0.000
LF1842	300YKB524	Wind	X	-0.06	0.000	Rela	From start	0.000
	Wx_Max - Rüzgar Yükü	GCS	Uniform	-0.06	1.000	Length		0.000
LF1843	300YKB526	Force	X	-0.01	0.000	Rela	From start	0.000
	Wx_Çalışma - Rüzgar Yükü	GCS	Uniform		1.000	Length		0.000
LF1844	300YKB526	Wind	X	-0.06	0.000	Rela	From start	0.000
	Wx_Max - Rüzgar Yükü	GCS	Uniform	-0.06	1.000	Length		0.000
LF1845	300YKB528	Force	X	-0.01	0.000	Rela	From start	0.000
	Wx_Çalışma - Rüzgar Yükü	GCS	Uniform		1.000	Length		0.000
LF1846	300YKB528	Wind	X	-0.06	0.000	Rela	From start	0.000
	Wx_Max - Rüzgar Yükü	GCS	Uniform	-0.06	1.000	Length		0.000
LF1847	300YKB530	Force	X	-0.01	0.000	Rela	From start	0.000
	Wx_Çalışma - Rüzgar Yükü	GCS	Uniform		1.000	Length		0.000
LF1848	300YKB530	Wind	X	-0.06	0.000	Rela	From start	0.000
	Wx_Max - Rüzgar Yükü	GCS	Uniform	-0.06	1.000	Length		0.000
LF1849	300YKB532	Force	X	-0.01	0.000	Rela	From start	0.000
	Wx_Çalışma - Rüzgar Yükü	GCS	Uniform		1.000	Length		0.000
LF1850	300YKB532	Wind	X	-0.06	0.000	Rela	From start	0.000
	Wx_Max - Rüzgar Yükü	GCS	Uniform	-0.06	1.000	Length		0.000
LF1851	300YKB534	Force	X	-0.01	0.000	Rela	From start	0.000
	Wx_Çalışma - Rüzgar Yükü	GCS	Uniform		1.000	Length		0.000
LF1852	300YKB534	Wind	X	-0.06	0.000	Rela	From start	0.000
	Wx_Max - Rüzgar Yükü	GCS	Uniform	-0.06	1.000	Length		0.000
LF1853	300YKB536	Force	X	-0.01	0.000	Rela	From start	0.000
	Wx_Çalışma - Rüzgar Yükü	GCS	Uniform		1.000	Length		0.000
LF1854	300YKB536	Wind	X	-0.06	0.000	Rela	From start	0.000
	Wx_Max - Rüzgar Yükü	GCS	Uniform	-0.06	1.000	Length		0.000
LF1855	300YKB538	Force	X	-0.01	0.000	Rela	From start	0.000
	Wx_Çalışma - Rüzgar Yükü	GCS	Uniform		1.000	Length		0.000
LF1856	300YKB538	Wind	X	-0.06	0.000	Rela	From start	0.000
	Wx_Max - Rüzgar Yükü	GCS	Uniform	-0.06	1.000	Length		0.000
LF1857	300YKB540	Force	X	-0.01	0.000	Rela	From start	0.000
	Wx_Çalışma - Rüzgar Yükü	GCS	Uniform		1.000	Length		0.000
LF1858	300YKB540	Wind	X	-0.06	0.000	Rela	From start	0.000
	Wx_Max - Rüzgar Yükü	GCS	Uniform	-0.06	1.000	Length		0.000
LF1859	300YKB542	Force	X	-0.01	0.000	Rela	From start	0.000
	Wx_Çalışma - Rüzgar Yükü	GCS	Uniform		1.000	Length		0.000
LF1860	300YKB542	Wind	X	-0.06	0.000	Rela	From start	0.000
	Wx_Max - Rüzgar Yükü	GCS	Uniform	-0.06	1.000	Length		0.000
LF1861	300YKB544	Force	X	-0.01	0.000	Rela	From start	0.000
	Wx_Çalışma - Rüzgar Yükü	GCS	Uniform		1.000	Length		0.000
LF1862	300YKB544	Wind	X	-0.06	0.000	Rela	From start	0.000
	Wx_Max - Rüzgar Yükü	GCS	Uniform	-0.06	1.000	Length		0.000
LF1863	300YKB546	Force	X	-0.01	0.000	Rela	From start	0.000
	Wx_Çalışma - Rüzgar Yükü	GCS	Uniform		1.000	Length		0.000
LF1864	300YKB546	Wind	X	-0.06	0.000	Rela	From start	0.000

Name	Member	Type	Dir	Value - P_1 [kN/m]	Pos x_1	Coor	Orig	Ecc ey [cm]
	Load case	System	Distribution	Value - P_2 [kN/m]	Pos x_2	Loc		Ecc ez [cm]
	Wx_Max - Rüzgar Yükü	GCS	Uniform	-0.06	1.000	Length		0.000
LF1865	300YKB548	Force	X	-0.01	0.000	Rela	From start	0.000
	Wx_Çalışma - Rüzgar Yükü	GCS	Uniform		1.000	Length		0.000
LF1866	300YKB548	Wind	X	-0.06	0.000	Rela	From start	0.000
	Wx_Max - Rüzgar Yükü	GCS	Uniform	-0.06	1.000	Length		0.000
LF1867	300YKB550	Force	X	-0.01	0.000	Rela	From start	0.000
	Wx_Çalışma - Rüzgar Yükü	GCS	Uniform		1.000	Length		0.000
LF1868	300YKB550	Wind	X	-0.06	0.000	Rela	From start	0.000
	Wx_Max - Rüzgar Yükü	GCS	Uniform	-0.06	1.000	Length		0.000
LF1869	300YKB552	Force	X	-0.01	0.000	Rela	From start	0.000
	Wx_Çalışma - Rüzgar Yükü	GCS	Uniform		1.000	Length		0.000
LF1870	300YKB552	Wind	X	-0.06	0.000	Rela	From start	0.000
	Wx_Max - Rüzgar Yükü	GCS	Uniform	-0.06	1.000	Length		0.000
LF1871	300YKB554	Force	X	-0.01	0.000	Rela	From start	0.000
	Wx_Çalışma - Rüzgar Yükü	GCS	Uniform		1.000	Length		0.000
LF1872	300YKB554	Wind	X	-0.06	0.000	Rela	From start	0.000
	Wx_Max - Rüzgar Yükü	GCS	Uniform	-0.06	1.000	Length		0.000
LF1873	300YKB556	Force	X	-0.01	0.000	Rela	From start	0.000
	Wx_Çalışma - Rüzgar Yükü	GCS	Uniform		1.000	Length		0.000
LF1874	300YKB556	Wind	X	-0.06	0.000	Rela	From start	0.000
	Wx_Max - Rüzgar Yükü	GCS	Uniform	-0.06	1.000	Length		0.000
LF1875	300YKB558	Force	X	-0.01	0.000	Rela	From start	0.000
	Wx_Çalışma - Rüzgar Yükü	GCS	Uniform		1.000	Length		0.000
LF1876	300YKB558	Wind	X	-0.06	0.000	Rela	From start	0.000
	Wx_Max - Rüzgar Yükü	GCS	Uniform	-0.06	1.000	Length		0.000
LF1877	300YKB560	Force	X	-0.01	0.000	Rela	From start	0.000
	Wx_Çalışma - Rüzgar Yükü	GCS	Uniform		1.000	Length		0.000
LF1878	300YKB560	Wind	X	-0.07	0.000	Rela	From start	0.000
	Wx_Max - Rüzgar Yükü	GCS	Uniform	-0.07	1.000	Length		0.000
LF1879	300YKB562	Force	X	-0.01	0.000	Rela	From start	0.000
	Wx_Çalışma - Rüzgar Yükü	GCS	Uniform		1.000	Length		0.000
LF1880	300YKB562	Wind	X	-0.07	0.000	Rela	From start	0.000
	Wx_Max - Rüzgar Yükü	GCS	Uniform	-0.07	1.000	Length		0.000
LF1881	300YKB564	Force	X	-0.01	0.000	Rela	From start	0.000
	Wx_Çalışma - Rüzgar Yükü	GCS	Uniform		1.000	Length		0.000
LF1882	300YKB564	Wind	X	-0.07	0.000	Rela	From start	0.000
	Wx_Max - Rüzgar Yükü	GCS	Uniform	-0.07	1.000	Length		0.000
LF1883	300YKB566	Force	X	-0.01	0.000	Rela	From start	0.000
	Wx_Çalışma - Rüzgar Yükü	GCS	Uniform		1.000	Length		0.000
LF1884	300YKB566	Wind	X	-0.07	0.000	Rela	From start	0.000
	Wx_Max - Rüzgar Yükü	GCS	Uniform	-0.07	1.000	Length		0.000
LF1885	300YKB568	Force	X	-0.01	0.000	Rela	From start	0.000
	Wx_Çalışma - Rüzgar Yükü	GCS	Uniform		1.000	Length		0.000
LF1886	300YKB568	Wind	X	-0.07	0.000	Rela	From start	0.000
	Wx_Max - Rüzgar Yükü	GCS	Uniform	-0.07	1.000	Length		0.000
LF1887	300YKB570	Force	X	-0.01	0.000	Rela	From start	0.000
	Wx_Çalışma - Rüzgar Yükü	GCS	Uniform		1.000	Length		0.000
LF1888	300YKB570	Wind	X	-0.07	0.000	Rela	From start	0.000
	Wx_Max - Rüzgar Yükü	GCS	Uniform	-0.07	1.000	Length		0.000
LF1889	300YKB572	Force	X	-0.01	0.000	Rela	From start	0.000
	Wx_Çalışma - Rüzgar Yükü	GCS	Uniform		1.000	Length		0.000
LF1890	300YKB572	Wind	X	-0.07	0.000	Rela	From start	0.000
	Wx_Max - Rüzgar Yükü	GCS	Uniform	-0.07	1.000	Length		0.000
LF1891	300YKB574	Force	X	-0.01	0.000	Rela	From start	0.000
	Wx_Çalışma - Rüzgar Yükü	GCS	Uniform		1.000	Length		0.000
LF1892	300YKB574	Wind	X	-0.07	0.000	Rela	From start	0.000
	Wx_Max - Rüzgar Yükü	GCS	Uniform	-0.07	1.000	Length		0.000
LF1893	300YKB576	Force	X	-0.01	0.000	Rela	From start	0.000
	Wx_Çalışma - Rüzgar Yükü	GCS	Uniform		1.000	Length		0.000
LF1894	300YKB576	Wind	X	-0.07	0.000	Rela	From start	0.000
	Wx_Max - Rüzgar Yükü	GCS	Uniform	-0.07	1.000	Length		0.000
LF1895	300YKB578	Force	X	-0.01	0.000	Rela	From start	0.000
	Wx_Çalışma - Rüzgar Yükü	GCS	Uniform		1.000	Length		0.000
LF1896	300YKB578	Wind	X	-0.07	0.000	Rela	From start	0.000
	Wx_Max - Rüzgar Yükü	GCS	Uniform	-0.07	1.000	Length		0.000
LF1897	300YKB580	Force	X	-0.01	0.000	Rela	From start	0.000
	Wx_Çalışma - Rüzgar Yükü	GCS	Uniform		1.000	Length		0.000
LF1898	300YKB580	Wind	X	-0.07	0.000	Rela	From start	0.000
	Wx_Max - Rüzgar Yükü	GCS	Uniform	-0.07	1.000	Length		0.000
LF1899	300YKB582	Force	X	-0.01	0.000	Rela	From start	0.000
	Wx_Çalışma - Rüzgar Yükü	GCS	Uniform		1.000	Length		0.000
LF1900	300YKB582	Wind	X	-0.07	0.000	Rela	From start	0.000
	Wx_Max - Rüzgar Yükü	GCS	Uniform	-0.07	1.000	Length		0.000
LF1901	300YKB584	Force	X	-0.01	0.000	Rela	From start	0.000

Name	Member	Type	Dir	Value - P_1 [kN/m]	Pos x_1	Coor	Orig	Ecc ey [cm]
	Load case	System	Distribution	Value - P_2 [kN/m]	Pos x_2	Loc		Ecc ez [cm]
	Wx_Çalışma - Rüzgar Yükü	GCS	Uniform		1.000	Length		0.000
LF1902	300YKB584	Wind	X	-0.07	0.000	Rela	From start	0.000
	Wx_Max - Rüzgar Yükü	GCS	Uniform	-0.07	1.000	Length		0.000
LF1903	300YKB586	Force	X	-0.01	0.000	Rela	From start	0.000
	Wx_Çalışma - Rüzgar Yükü	GCS	Uniform		1.000	Length		0.000
LF1904	300YKB586	Wind	X	-0.07	0.000	Rela	From start	0.000
	Wx_Max - Rüzgar Yükü	GCS	Uniform	-0.07	1.000	Length		0.000
LF1905	300YKB588	Force	X	-0.01	0.000	Rela	From start	0.000
	Wx_Çalışma - Rüzgar Yükü	GCS	Uniform		1.000	Length		0.000
LF1906	300YKB588	Wind	X	-0.07	0.000	Rela	From start	0.000
	Wx_Max - Rüzgar Yükü	GCS	Uniform	-0.07	1.000	Length		0.000
LF1907	300YKB590	Force	X	-0.01	0.000	Rela	From start	0.000
	Wx_Çalışma - Rüzgar Yükü	GCS	Uniform		1.000	Length		0.000
LF1908	300YKB590	Wind	X	-0.07	0.000	Rela	From start	0.000
	Wx_Max - Rüzgar Yükü	GCS	Uniform	-0.07	1.000	Length		0.000
LF1909	300YKB592	Force	X	-0.01	0.000	Rela	From start	0.000
	Wx_Çalışma - Rüzgar Yükü	GCS	Uniform		1.000	Length		0.000
LF1910	300YKB592	Wind	X	-0.07	0.000	Rela	From start	0.000
	Wx_Max - Rüzgar Yükü	GCS	Uniform	-0.07	1.000	Length		0.000
LF1911	300YKB594	Force	X	-0.01	0.000	Rela	From start	0.000
	Wx_Çalışma - Rüzgar Yükü	GCS	Uniform		1.000	Length		0.000
LF1912	300YKB594	Wind	X	-0.07	0.000	Rela	From start	0.000
	Wx_Max - Rüzgar Yükü	GCS	Uniform	-0.07	1.000	Length		0.000
LF1913	300YKB596	Force	X	-0.01	0.000	Rela	From start	0.000
	Wx_Çalışma - Rüzgar Yükü	GCS	Uniform		1.000	Length		0.000
LF1914	300YKB596	Wind	X	-0.07	0.000	Rela	From start	0.000
	Wx_Max - Rüzgar Yükü	GCS	Uniform	-0.07	1.000	Length		0.000
LF1915	300YKB598	Force	X	-0.01	0.000	Rela	From start	0.000
	Wx_Çalışma - Rüzgar Yükü	GCS	Uniform		1.000	Length		0.000
LF1916	300YKB598	Wind	X	-0.07	0.000	Rela	From start	0.000
	Wx_Max - Rüzgar Yükü	GCS	Uniform	-0.07	1.000	Length		0.000

19. ELEMANLARDAKİ İÇ KUVVETLER

Nonlinear calculation, Extreme : Cross-section, System : Principal
Selection : All
Class : NC ULS

Member	css	dx [cm]	Case	N [kN]	Vy [kN]	Vz [kN]	Mx [kNm]	My [kNm]	Mz [kNm]
300FDD6F12	Dikme - CFCHS48.3X3	0.000	NC2	**-22.60**	-0.38	0.37	0.00	0.00	0.00
300FDD6F172	Dikme - CFCHS48.3X3	300.000	NC3	**0.25**	0.00	0.16	0.00	-0.06	0.00
300FDD6F12	Dikme - CFCHS48.3X3	225.000	NC4	-19.09	**-0.88**	0.23	-0.07	-0.01	0.09
300FDD6F0	Dikme - CFCHS48.3X3	38.000	NC4	-3.95	**0.71**	0.09	0.09	-0.04	-0.02
300FDD6F156	Dikme - CFCHS48.3X3	125.000	NC3	-0.27	-0.06	**-1.99**	-0.01	**0.45**	0.01
300FDD6F152	Dikme - CFCHS48.3X3	238.000	NC2	-2.02	-0.10	**1.14**	0.00	0.00	0.01
300FDD6F12	Dikme - CFCHS48.3X3	238.000	NC4	-19.08	-0.37	0.19	**-0.07**	0.02	0.01
300FDD6F10	Dikme - CFCHS48.3X3	25.000	NC4	-7.69	0.24	-0.06	**0.09**	-0.03	-0.04
300FDD6F11	Dikme - CFCHS48.3X3	25.000	NC3	-11.09	0.18	-1.27	0.00	**-0.36**	0.01
300FDD6F0	Dikme - CFCHS48.3X3	25.000	NC4	-3.95	0.59	0.06	0.09	-0.05	**-0.10**
300FDD6F153	Dikme - CFCHS48.3X3	125.000	NC4	-0.14	-0.19	-0.03	0.03	0.01	**0.14**
110YKB172	Yatay - CFCHS48.3X2.5	0.000	NC3	**-8.96**	-0.19	0.77	0.00	-0.13	-0.01
110YKB66	Yatay - CFCHS48.3X2.5	10.001	NC1	**1.18**	-0.08	2.38	0.00	0.04	0.00
110YKB69	Yatay - CFCHS48.3X2.5	20.000	NC3	-2.01	**-1.11**	0.09	0.00	0.01	0.17
110YKB33	Yatay - CFCHS48.3X2.5	52.500	NC3	-2.42	**1.29**	0.07	0.00	0.04	**0.21**
110YKB162	Yatay - CFCHS48.3X2.5	72.500	NC1	-0.47	-0.34	**-4.67**	0.00	-0.28	-0.02
110YKB167	Yatay - CFCHS48.3X2.5	0.000	NC2	0.03	0.21	**4.77**	0.00	**-0.33**	-0.01
110YKB30	Yatay - CFCHS48.3X2.5	20.000	NC3	0.10	-0.29	1.40	**0.00**	0.15	-0.07
110YKB66	Yatay - CFCHS48.3X2.5	20.000	NC3	0.83	0.35	1.36	**0.00**	0.15	0.08
110YKB166	Yatay - CFCHS48.3X2.5	52.500	NC1	-0.46	-0.01	-4.63	0.00	**0.66**	0.00
110YKB33	Yatay - CFCHS48.3X2.5	20.000	NC3	-2.42	1.22	0.11	0.00	0.01	**-0.20**
C.Platform329	C.Platform - General cross-section	281.250	NC3	**-0.74**	-0.13	-0.16	0.00	0.03	-1.76
C.Platform331	C.Platform - General cross-section	0.000	NC3	**0.90**	-0.82	0.17	0.00	0.00	0.27
C.Platform353	C.Platform - General cross-section	0.000	NC3	-0.42	**-1.94**	0.18	0.00	0.00	2.22
C.Platform332	C.Platform - General cross-section	300.000	NC3	-0.49	**2.02**	-0.18	0.00	0.00	**2.30**
C.Platform301	C.Platform - General cross-section	300.000	NC1	-0.11	0.11	**-2.34**	0.00	0.00	0.33
C.Platform303	C.Platform - General cross-section	0.000	NC1	-0.10	-0.17	**2.34**	0.00	0.00	0.33
C.Platform299	C.Platform - General cross-section	300.000	NC3	0.72	1.37	-1.25	**-0.01**	0.01	1.99
C.Platform302	C.Platform - General cross-section	0.000	NC3	0.57	-1.55	1.25	**0.01**	0.01	1.97
C.Platform327	C.Platform - General cross-section	0.000	NC3	-0.60	-0.61	1.27	0.01	**-0.01**	1.56
C.Platform303	C.Platform - General cross-section	149.999	NC1	-0.12	-0.18	0.00	0.00	**1.75**	0.05
C.Platform333	C.Platform - General cross-section	0.000	NC3	0.62	1.43	0.17	0.00	0.00	**-2.27**
Topukluk110luk22	Topukluk - General cross-section	72.500	NC1	**-1.21**	-0.05	-0.04	0.00	0.00	-0.05
Topukluk81	Topukluk - General cross-section	243.750	NC3	**0.16**	-0.40	-0.08	0.00	0.04	-0.08
Topukluk109	Topukluk - General cross-section	300.000	NC3	-0.08	**-0.66**	-0.13	0.00	-0.02	-0.35
Topukluk100	Topukluk - General cross-section	0.000	NC3	-0.02	**0.73**	0.14	0.00	**-0.03**	**-0.41**
Topukluk119	Topukluk - General cross-section	300.000	NC3	-0.43	-0.64	**-0.13**	0.00	-0.02	-0.30
Topukluk110	Topukluk - General cross-section	0.000	NC3	-0.26	0.72	**0.14**	0.00	-0.02	-0.35
Topukluk119	Topukluk - General cross-section	0.000	NC3	-0.42	0.62	0.14	**0.00**	-0.02	-0.27
Topukluk101	Topukluk - General cross-section	300.000	NC3	0.10	-0.65	-0.13	**0.00**	-0.02	-0.38
Topukluk110	Topukluk - General cross-section	150.001	NC3	-0.26	0.09	0.00	0.00	**0.09**	0.26
Topukluk110	Topukluk - General cross-section	168.750	NC3	-0.26	0.01	-0.01	0.00	0.09	**0.27**
300CKB1	Çapraz - CFCHS48.3X2.5	0.000	NC3	**-1.00**	-0.16	0.07	0.00	-0.04	0.02
300CKB11	Çapraz - CFCHS48.3X2.5	360.555	NC4	**2.90**	0.00	-0.06	0.00	-0.03	-0.01
300CKB9	Çapraz - CFCHS48.3X2.5	0.000	NC3	-0.85	**-0.19**	0.07	**0.00**	-0.03	0.02
300CKB9	Çapraz - CFCHS48.3X2.5	360.555	NC3	-0.76	**0.20**	-0.07	**0.00**	**-0.04**	0.04
300CKB9	Çapraz - CFCHS48.3X2.5	360.555	NC1	-0.88	0.05	**-0.08**	0.00	-0.04	0.02
300CKB9	Çapraz - CFCHS48.3X2.5	0.000	NC1	-0.96	-0.05	**0.07**	0.00	-0.04	0.01
300CKB9	Çapraz - CFCHS48.3X2.5	180.277	NC1	-0.92	0.00	0.00	0.00	**0.03**	-0.03
300CKB9	Çapraz - CFCHS48.3X2.5	170.789	NC3	-0.81	-0.01	0.00	0.00	0.03	**-0.14**
300CKB10	Çapraz - CFCHS48.3X2.5	360.555	NC3	-0.21	0.19	-0.07	0.00	-0.04	**0.04**

20. Deplasmanlar SLS

Linear calculation, Extreme : Global
Selection : All
Class : All SLS

Node	Case	Ux [mm]	Uy [mm]	Uz [mm]
N180	CO7/1	**-6.1**	1.8	-1.0
N190	CO8/2	**1.4**	7.9	-1.9
N3	CO5/3	-0.1	**-0.1**	0.0
N177	CO8/2	0.1	**12.7**	-0.6
N1123	CO6/4	0.0	3.1	**-3.3**
N1	CO5/3	-0.1	0.0	**0.0**

21. Deplasmanlar NC SLS

Nonlinear calculation, Extreme : Global
Selection : All
Class : NC SLS

Node	Case	Ux [mm]	Uy [mm]	Uz [mm]
N180	NC7	**-6.2**	1.9	-1.0
N189	NC8	**1.4**	8.1	-1.1
N1	NC5	-0.1	**-0.1**	**0.0**
N177	NC8	0.1	**13.0**	-0.6
N1123	NC6	0.0	3.2	**-3.3**

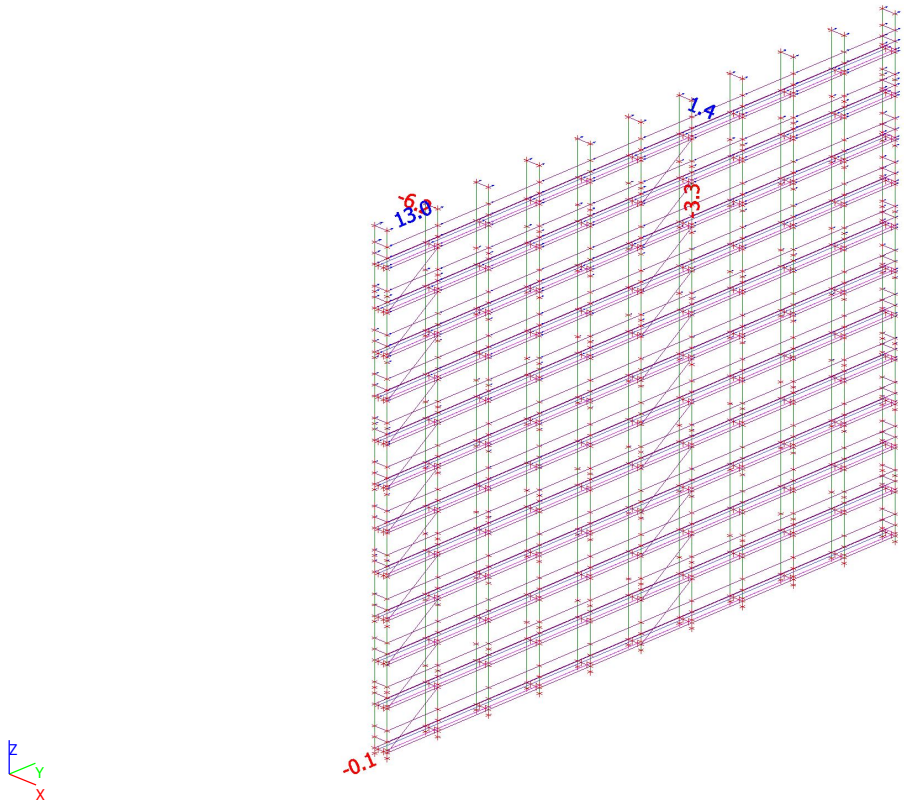

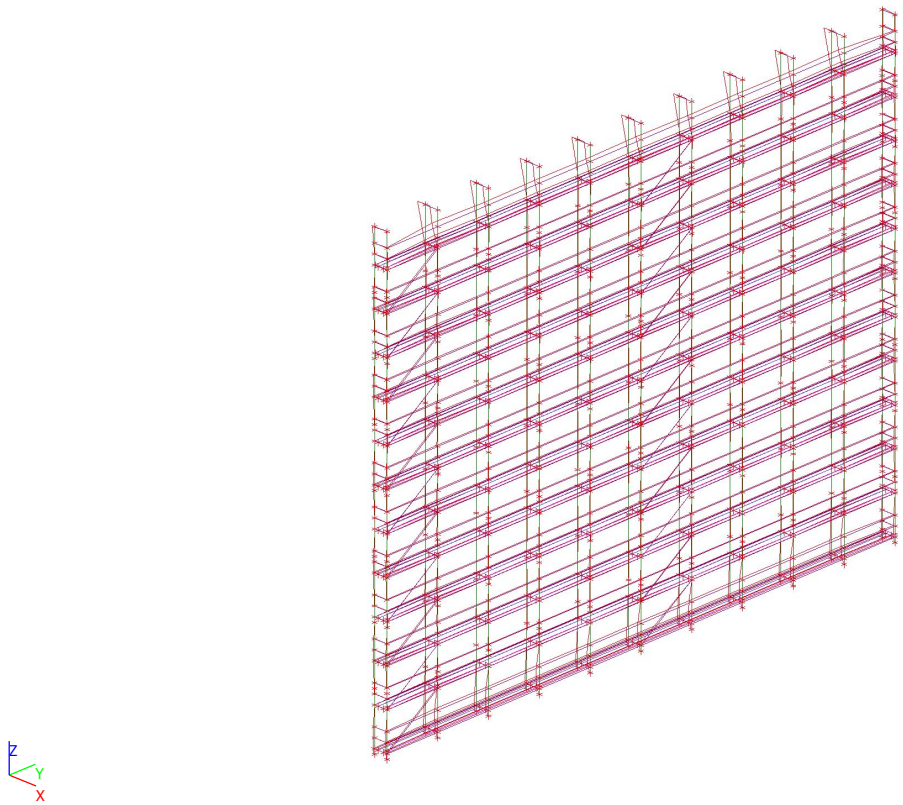
Z
Y
X

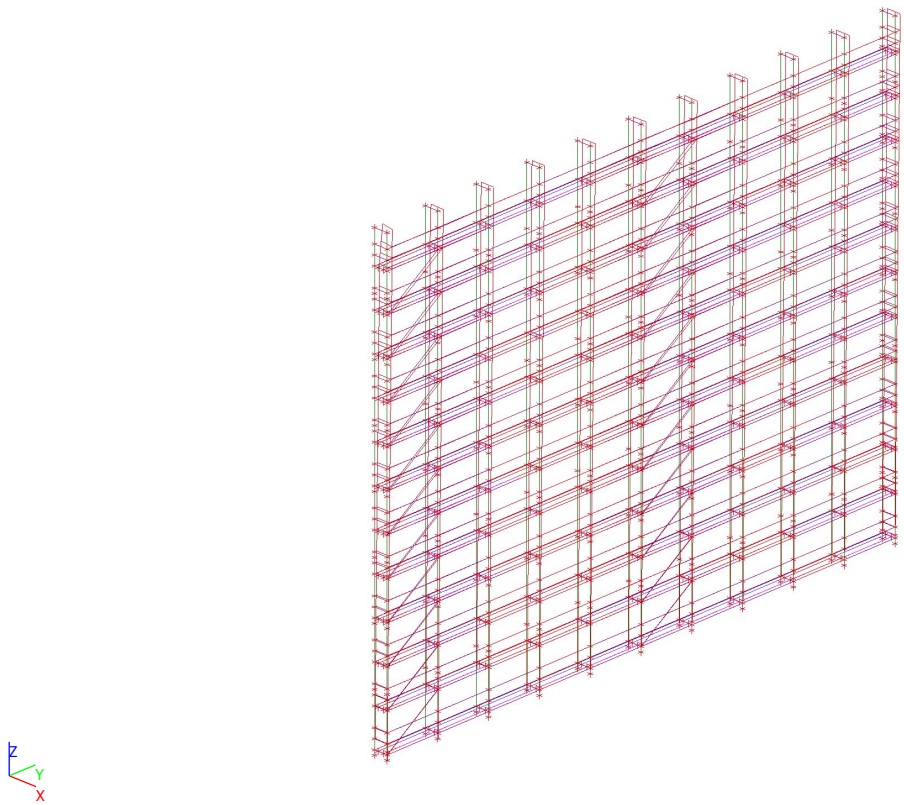
Z
Y
X

22. HERBİR KESİTİN DAYANIM TAHKİKİ

Nonlinear calculation, Extreme : Global
Selection : All
Class : NC ULS
Cross-section : Dikme - CFCHS48.3X3

Member 300FDD6F156	**3.000 m**	**CFCHS48.3X3**	**S 355**	**NC3**	**0.25 -**

Partial safety factors	
Gamma M0 for resistance of cross-sections	1.10
Gamma M1 for resistance to instability	1.10
Gamma M2 for resistance of net sections	1.25

Material		
Yield strength fy	355.0	MPa
Ultimate strength fu	490.0	MPa
Fabrication	Rolled	

...::SECTION CHECK::...

The critical check is on position 1.250 m

Internal forces	Calculated	Unit
N,Ed	-0.27	kN
Vy,Ed	-0.06	kN
Vz,Ed	-1.99	kN
T,Ed	-0.01	kNm
My,Ed	0.45	kNm
Mz,Ed	0.01	kNm

Scaffolding check for tubular members
According to EN 12811-1 & DIN 4420 Teil 1 art. 5.4.7.4 and table 7

Table of values		
Npl.d	137.80	kN
Vpl.d	50.65	kN
Mpl.d	1.84	kNm
Unity check N	0.00	
Unity check V	0.04	
Unity check M	0.25	
Unity check Interaction	0.25	
Unity check Max	0.25	-

The member satisfies the section check.

X
Z
Y
0.25

Nonlinear calculation, Extreme : Global
Selection : All
Class : NC ULS
Cross-section : Yatay - CFCHS48.3X2.5

EN 1993-1-1 Code Check
EN 12811-1 Scaffolding Check
National annex: Standard EN

Member 110YKB166	**0.725 m**	**CFCHS48.3X2.5**	**S 355**	**NC1**	**0.42 -**

Partial safety factors	
Gamma M0 for resistance of cross-sections	1.10
Gamma M1 for resistance to instability	1.10
Gamma M2 for resistance of net sections	1.25

Material		
Yield strength fy	355.0	MPa
Ultimate strength fu	490.0	MPa
Fabrication	Rolled	

...::SECTION CHECK::...

The critical check is on position 0.525 m

Internal forces	Calculated	Unit
N,Ed	-0.46	kN
Vy,Ed	-0.01	kN
Vz,Ed	-4.63	kN
T,Ed	0.00	kNm
My,Ed	0.66	kNm
Mz,Ed	0.00	kNm

Scaffolding check for tubular members
According to EN 12811-1 & DIN 4420 Teil 1 art. 5.4.7.4 and table 7

Table of values		
Npl.d	116.18	kN
Vpl.d	42.70	kN
Mpl.d	1.58	kNm
Unity check N	0.00	
Unity check V	0.12	
Unity check M	0.42	
Unity check Interaction	0.42	
Unity check Max	0.42	-

The member satisfies the section check.

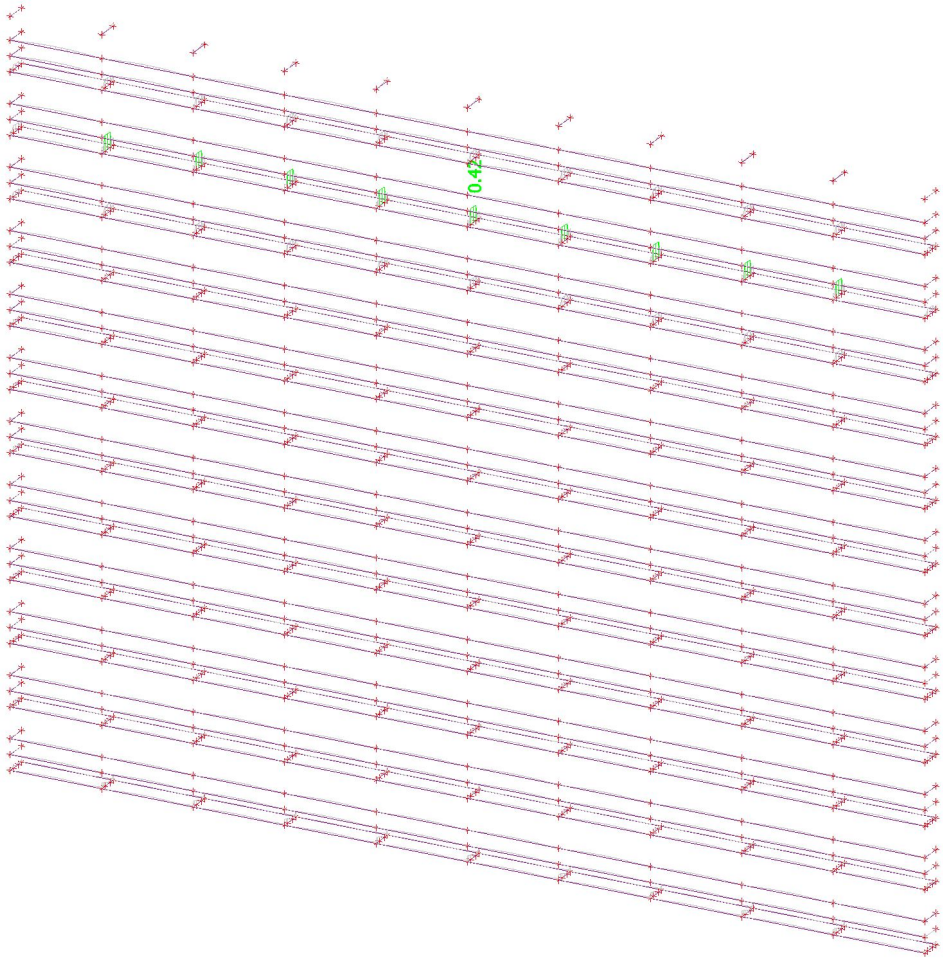

Nonlinear calculation, Extreme : Global
Selection : All
Class : NC ULS
Cross-section : Çapraz - CFCHS48.3X2.5

EN 1993-1-1 Code Check
EN 12811-1 Scaffolding Check
National annex: Standard EN

Member 300CKB9	**3.606 m**	**CFCHS48.3X2.5**	**S 355**	**NC3**	**0.09 -**

Partial safety factors	
Gamma M0 for resistance of cross-sections	1.10
Gamma M1 for resistance to instability	1.10
Gamma M2 for resistance of net sections	1.25

Material		
Yield strength fy	355.0	MPa
Ultimate strength fu	490.0	MPa
Fabrication	Rolled	

...::SECTION CHECK::...

The critical check is on position 1.708 m

Internal forces	Calculated	Unit
N,Ed	-0.81	kN
Vy,Ed	-0.01	kN
Vz,Ed	0.00	kN
T,Ed	0.00	kNm
My,Ed	0.03	kNm
Mz,Ed	-0.14	kNm

Scaffolding check for tubular members
According to EN 12811-1 & DIN 4420 Teil 1 art. 5.4.7.4 and table 7

Table of values		
Npl.d	116.18	kN
Vpl.d	42.70	kN
Mpl.d	1.58	kNm
Unity check N	0.01	
Unity check V	0.00	
Unity check M	0.09	
Unity check Interaction	0.09	
Unity check Max	0.09	-

The member satisfies the section check.

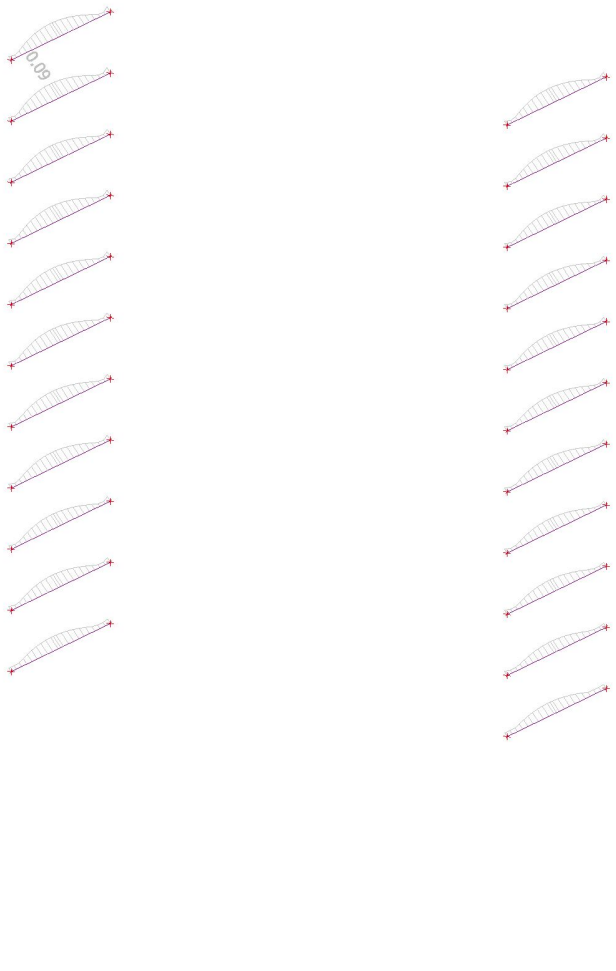

Nonlinear calculation, Extreme : Global
Selection : All
Class : NC ULS
Cross-section : C.Platform - General cross-section

Member C.Platform301	**3.000 m**	**General cross-section**	**S 235**	**NC1**	**0.47 -**

Partial safety factors	
Gamma M0 for resistance of cross-sections	1.10
Gamma M1 for resistance to instability	1.10
Gamma M2 for resistance of net sections	1.25

Material		
Yield strength fy	235.0	MPa
Ultimate strength fu	360.0	MPa
Fabrication	Rolled	

Warning: Strength reduction in function of the thickness is not supported for this type of cross-section.

...::SECTION CHECK::...

Classification for cross-section design
According to EN 1993-1-1 article 5.5.2
Warning: Classification is not supported for this type of cross-section.
The section is checked as elastic, class 3.

The critical check is on position 1.500 m

Axis definition :
- principal y- axis in this code check is referring to the principal z axis in Scia Engineer
- principal z- axis in this code check is referring to the principal y axis in Scia Engineer

Internal forces	Calculated	Unit
N,Ed	-0.13	kN
Vy,Ed	0.00	kN
Vz,Ed	0.12	kN
T,Ed	0.00	kNm
My,Ed	0.14	kNm
Mz,Ed	1.75	kNm

Compression check
According to EN 1993-1-1 article 6.2.4 and formula (6.9)

A	1.0018e-03	m^2
Nc,Rd	214.02	kN
Unity check	0.00	-

Bending moment check for My
According to EN 1993-1-1 article 6.2.5 and formula (6.12),(6.14)

Wel,y,min	9.7595e-05	m^3
Mel,y,Rd	20.85	kNm
Unity check	0.01	-

Bending moment check for Mz
According to EN 1993-1-1 article 6.2.5 and formula (6.12),(6.14)

Wel,z,min	1.7563e-05	m^3
Mel,z,Rd	3.75	kNm
Unity check	0.47	-

Shear check for Vy
According to EN 1993-1-1 article 6.2.6 and formula (6.19)

Tau,Vy,Ed	0.0	MPa
Tau,Rd	123.3	MPa
Unity check	0.00	-

Note: No shear area is given for this section/fabrication, therefore the plastic shear resistance cannot be determined. As a result the elastic shear resistance according to EN 1993-1-1 article 6.2.6(4) is verified.
Shear check for Vz
According to EN 1993-1-1 article 6.2.6 and formula (6.19)

Tau,Vz,Ed	0.3	MPa
Tau,Rd	123.3	MPa
Unity check	0.00	-

Note: No shear area is given for this section/fabrication, therefore the plastic shear resistance cannot be determined. As a result the elastic shear resistance according to EN 1993-1-1 article 6.2.6(4) is verified.

Torsion check
According to EN 1993-1-1 article 6.2.7 and formula (6.23)

Tau,t,Ed	6.2	MPa
Tau,Rd	123.3	MPa
Unity check	0.05	-

Combined bending, axial force and shear force check
According to EN 1993-1-1 article 6.2.1(5) and formula (6.1)

Elastic verification		
Fibre	9	
Sigma,N,Ed	0.1	MPa
Sigma,My,Ed	-1.2	MPa
Sigma,Mz,Ed	-99.7	MPa
Sigma,tot,Ed	-100.8	MPa
Tau,Vy,Ed	0.0	MPa
Tau,Vz,Ed	0.1	MPa
Tau,t,Ed	3.5	MPa
Tau,tot,Ed	3.6	MPa
Sigma,von Mises,Ed	101.0	MPa
Unity check	0.47	-

The member satisfies the section check.

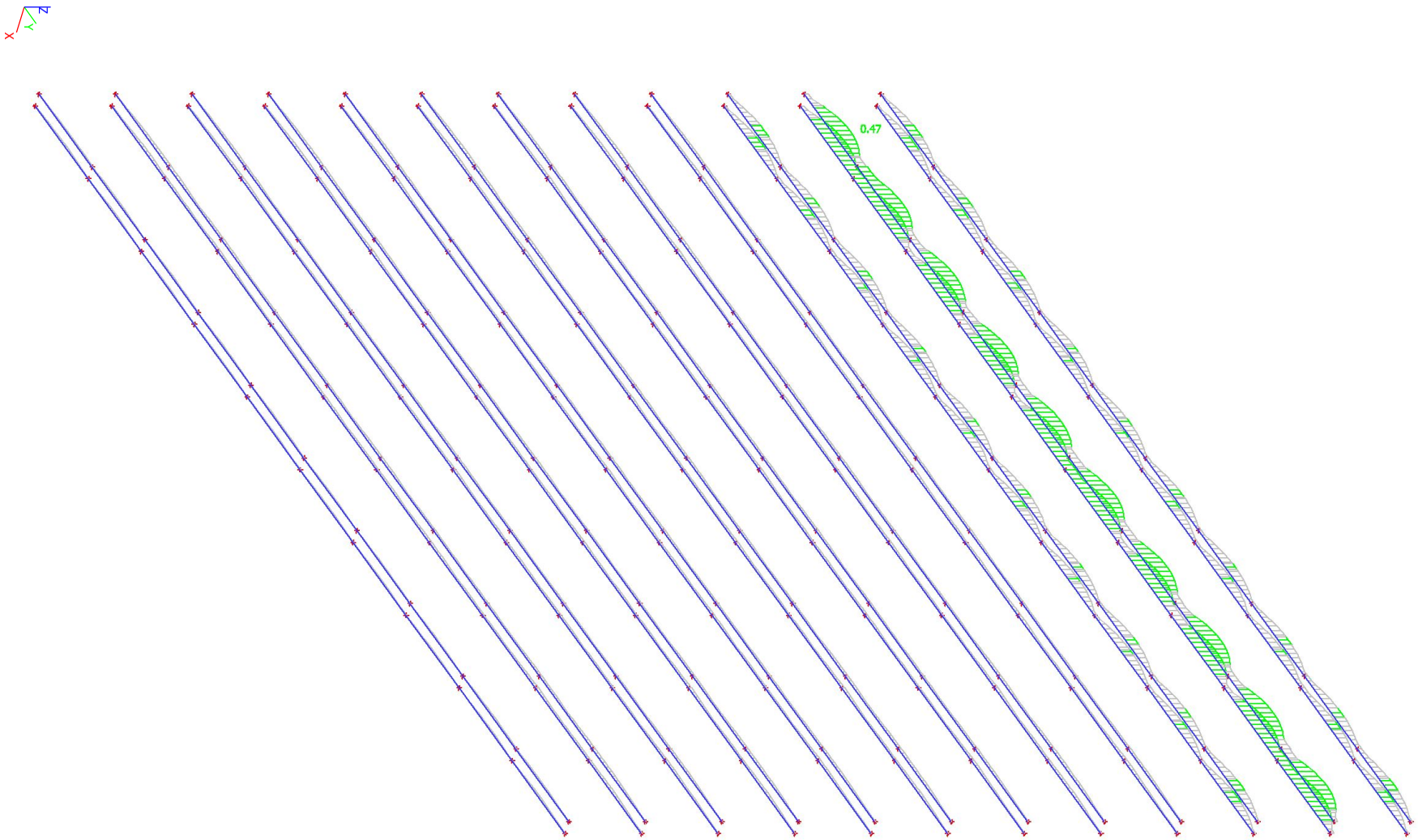
X
Y
Z
0.47

Nonlinear calculation, Extreme : Global
Selection : All
Class : NC ULS
Cross-section : Topukluk - General cross-section

EN 1993-1-1 Code Check
National annex: Standard EN

Member Topukluk100	**3.000 m**	**General cross-section**	**S 235**	**NC3**	**0.33 -**

Partial safety factors	
Gamma M0 for resistance of cross-sections	1.10
Gamma M1 for resistance to instability	1.10
Gamma M2 for resistance of net sections	1.25

Material		
Yield strength fy	235.0	MPa
Ultimate strength fu	360.0	MPa
Fabrication	Rolled	

Warning: Strength reduction in function of the thickness is not supported for this type of cross-section.

...::SECTION CHECK::...

Classification for cross-section design
According to EN 1993-1-1 article 5.5.2
Classification of Internal Compression parts
According to EN 1993-1-1 Table 5.2 Sheet 1

Maximum width-to-thickness ratio	28.62
Class 1 Limit	115.52
Class 2 Limit	133.17
Class 3 Limit	295.70

=> Internal Compression parts Class 1
Classification of Outstand Flanges
According to EN 1993-1-1 Table 5.2 Sheet 2

Maximum width-to-thickness ratio	1.75
Class 1 Limit	9.00
Class 2 Limit	10.00
Class 3 Limit	13.84

=> Outstand Flanges Class 1
=> Section classified as Class 1 for cross-section design

The critical check is on position 0.000 m

Internal forces	Calculated	Unit
N,Ed	-0.02	kN
Vy,Ed	0.73	kN
Vz,Ed	0.14	kN
T,Ed	0.00	kNm
My,Ed	-0.03	kNm
Mz,Ed	-0.41	kNm

Compression check
According to EN 1993-1-1 article 6.2.4 and formula (6.9)

A	5.1704e-04	m^2
Nc,Rd	110.46	kN
Unity check	0.00	-

Bending moment check for My
According to EN 1993-1-1 article 6.2.5 and formula (6.12),(6.13)

Wpl,y	2.3872e-05	m^3
Mpl,y,Rd	5.10	kNm
Unity check	0.00	-

Bending moment check for Mz
According to EN 1993-1-1 article 6.2.5 and formula (6.12),(6.13)

Wpl,z	8.7007e-06	m^3
Mpl,z,Rd	1.86	kNm
Unity check	0.22	-

Shear check for Vy
According to EN 1993-1-1 article 6.2.6 and formula (6.19)

Tau,Vy,Ed	4.5	MPa
Tau,Rd	123.3	MPa
Unity check	0.04	-

Note: No shear area is given for this section/fabrication, therefore the plastic shear resistance cannot be determined. As a result the elastic shear resistance according to EN 1993-1-1 article 6.2.6(4) is verified.
Shear check for Vz

According to EN 1993-1-1 article 6.2.6 and formula (6.19)

Tau,Vz,Ed	0.5	MPa
Tau,Rd	123.3	MPa
Unity check	0.00	-

Note: No shear area is given for this section/fabrication, therefore the plastic shear resistance cannot be determined. As a result the elastic shear resistance according to EN 1993-1-1 article 6.2.6(4) is verified.

Torsion check
According to EN 1993-1-1 article 6.2.7 and formula (6.23)

Tau,t,Ed	0.0	MPa
Tau,Rd	123.3	MPa
Unity check	0.00	-

Note: The unity check for torsion is lower than the limit value of 0.05. Therefore torsion is considered as insignificant and is ignored in the combined checks.

Combined bending, axial force and shear force check
According to EN 1993-1-1 article 6.2.1(5) and formula (6.1)

Elastic verification		
Fibre	16	
Sigma,N,Ed	0.0	MPa
Sigma,My,Ed	0.1	MPa
Sigma,Mz,Ed	-70.8	MPa
Sigma,tot,Ed	-70.6	MPa
Tau,Vy,Ed	1.2	MPa
Tau,Vz,Ed	0.5	MPa
Tau,t,Ed	0.0	MPa
Tau,tot,Ed	1.8	MPa
Sigma,von Mises,Ed	70.6	MPa
Unity check	0.33	-

Note: For this section no plastic shear resistance and corresponding Rho value can be determined. Therefore the elastic yield criterion according to EN 1993-1-1 article 6.2.1(5) is verified.

The member satisfies the section check.

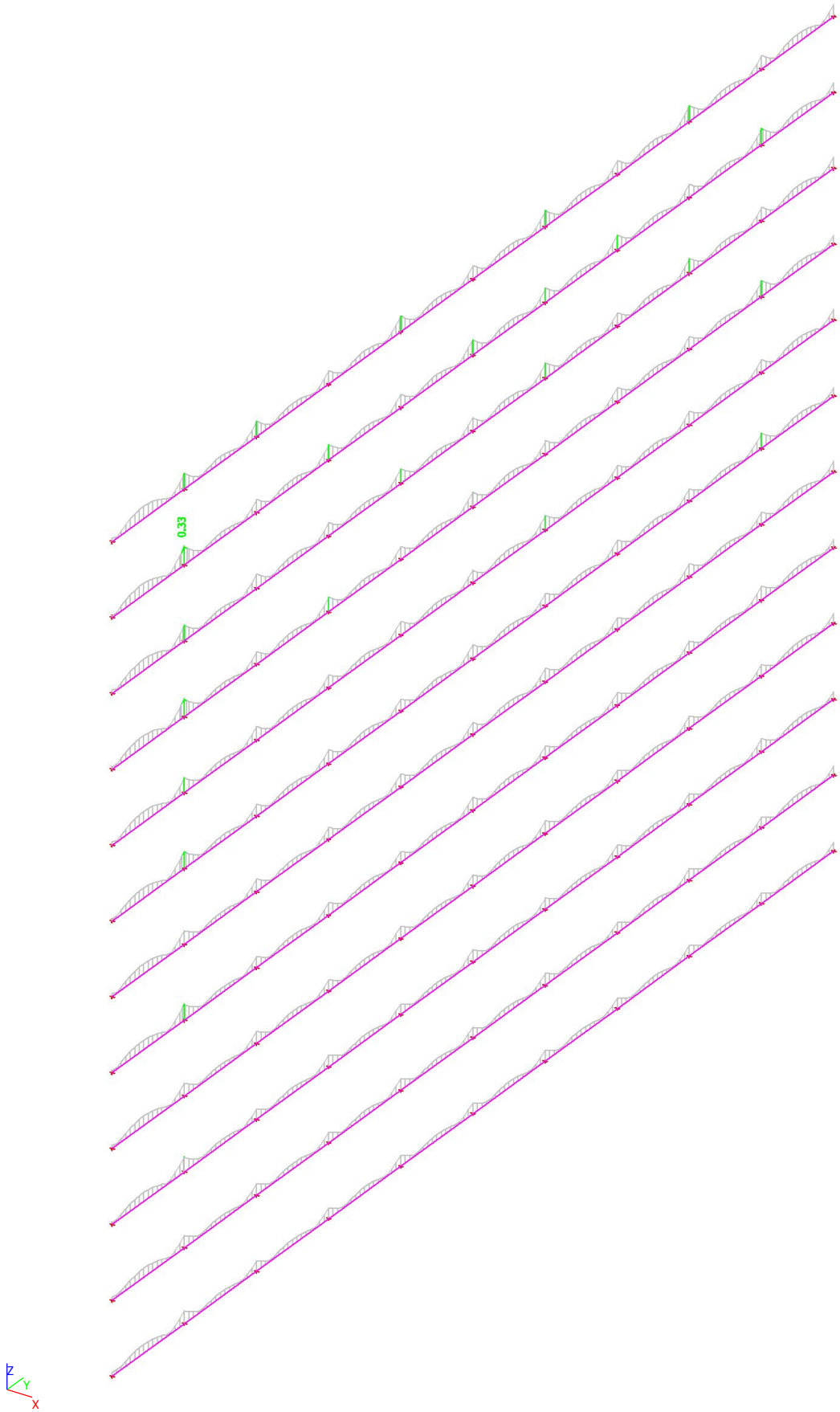
0,33
Z
Y
X

Nonlinear calculation, Extreme : Member
Selection : All
Class : NC ULS

Member	css	mat	Case	dx [cm]	un.check [-]	sec.check [-]	stab.check [-]
300FDD6F	Dikme - CFCHS48.3X3	S 355	NC3	25.000	0.10	0.10	0.00
300FDD6F0	Dikme - CFCHS48.3X3	S 355	NC1	0.000	0.10	0.10	0.00
300FDD6F1	Dikme - CFCHS48.3X3	S 355	NC3	25.000	0.17	0.17	0.00
300FDD6F2	Dikme - CFCHS48.3X3	S 355	NC3	225.000	0.17	0.17	0.00
300FDD6F3	Dikme - CFCHS48.3X3	S 355	NC3	25.000	0.19	0.19	0.00
300FDD6F4	Dikme - CFCHS48.3X3	S 355	NC3	225.000	0.21	0.21	0.00
300FDD6F5	Dikme - CFCHS48.3X3	S 355	NC3	25.000	0.19	0.19	0.00
300FDD6F6	Dikme - CFCHS48.3X3	S 355	NC3	225.000	0.20	0.20	0.00
300FDD6F7	Dikme - CFCHS48.3X3	S 355	NC3	25.000	0.19	0.19	0.00
300FDD6F8	Dikme - CFCHS48.3X3	S 355	NC3	225.000	0.21	0.21	0.00
300FDD6F9	Dikme - CFCHS48.3X3	S 355	NC3	25.000	0.19	0.19	0.00
300FDD6F10	Dikme - CFCHS48.3X3	S 355	NC3	225.000	0.20	0.20	0.00
300FDD6F11	Dikme - CFCHS48.3X3	S 355	NC3	25.000	0.19	0.19	0.00
300FDD6F12	Dikme - CFCHS48.3X3	S 355	NC3	225.000	0.21	0.21	0.00
300FDD6F13	Dikme - CFCHS48.3X3	S 355	NC3	25.000	0.19	0.19	0.00
300FDD6F14	Dikme - CFCHS48.3X3	S 355	NC3	225.000	0.20	0.20	0.00
300FDD6F15	Dikme - CFCHS48.3X3	S 355	NC3	25.000	0.19	0.19	0.00
300FDD6F16	Dikme - CFCHS48.3X3	S 355	NC3	225.000	0.21	0.21	0.00
300FDD6F17	Dikme - CFCHS48.3X3	S 355	NC3	25.000	0.17	0.17	0.00
300FDD6F18	Dikme - CFCHS48.3X3	S 355	NC3	225.000	0.18	0.18	0.00
300FDD6F19	Dikme - CFCHS48.3X3	S 355	NC3	225.000	0.09	0.09	0.00
300FDD6F20	Dikme - CFCHS48.3X3	S 355	NC3	25.000	0.08	0.08	0.00
300FDD6F21	Dikme - CFCHS48.3X3	S 355	NC1	0.000	0.07	0.07	0.00
300FDD6F22	Dikme - CFCHS48.3X3	S 355	NC1	0.000	0.09	0.09	0.00
300FDD6F23	Dikme - CFCHS48.3X3	S 355	NC2	0.000	0.11	0.11	0.00
300FDD6F24	Dikme - CFCHS48.3X3	S 355	NC3	125.000	0.15	0.15	0.00
300FDD6F25	Dikme - CFCHS48.3X3	S 355	NC1	0.000	0.11	0.11	0.00
300FDD6F26	Dikme - CFCHS48.3X3	S 355	NC2	0.000	0.13	0.13	0.00
300FDD6F27	Dikme - CFCHS48.3X3	S 355	NC1	0.000	0.11	0.11	0.00
300FDD6F28	Dikme - CFCHS48.3X3	S 355	NC3	125.000	0.14	0.14	0.00
300FDD6F29	Dikme - CFCHS48.3X3	S 355	NC1	0.000	0.11	0.11	0.00
300FDD6F30	Dikme - CFCHS48.3X3	S 355	NC2	0.000	0.13	0.13	0.00
300FDD6F31	Dikme - CFCHS48.3X3	S 355	NC1	0.000	0.11	0.11	0.00
300FDD6F32	Dikme - CFCHS48.3X3	S 355	NC3	125.000	0.14	0.14	0.00
300FDD6F33	Dikme - CFCHS48.3X3	S 355	NC1	0.000	0.11	0.11	0.00
300FDD6F34	Dikme - CFCHS48.3X3	S 355	NC2	0.000	0.15	0.15	0.00
300FDD6F35	Dikme - CFCHS48.3X3	S 355	NC1	0.000	0.11	0.11	0.00
300FDD6F36	Dikme - CFCHS48.3X3	S 355	NC3	125.000	0.14	0.14	0.00
300FDD6F37	Dikme - CFCHS48.3X3	S 355	NC1	0.000	0.11	0.11	0.00
300FDD6F38	Dikme - CFCHS48.3X3	S 355	NC2	0.000	0.13	0.13	0.00
300FDD6F39	Dikme - CFCHS48.3X3	S 355	NC1	0.000	0.11	0.11	0.00
300FDD6F40	Dikme - CFCHS48.3X3	S 355	NC3	125.000	0.15	0.15	0.00
300FDD6F41	Dikme - CFCHS48.3X3	S 355	NC1	0.000	0.07	0.07	0.00
300FDD6F42	Dikme - CFCHS48.3X3	S 355	NC2	0.000	0.07	0.07	0.00
300FDD6F43	Dikme - CFCHS48.3X3	S 355	NC3	25.000	0.07	0.07	0.00
300FDD6F44	Dikme - CFCHS48.3X3	S 355	NC1	0.000	0.09	0.09	0.00
300FDD6F45	Dikme - CFCHS48.3X3	S 355	NC2	0.000	0.10	0.10	0.00
300FDD6F46	Dikme - CFCHS48.3X3	S 355	NC3	225.000	0.16	0.16	0.00
300FDD6F47	Dikme - CFCHS48.3X3	S 355	NC2	0.000	0.11	0.11	0.00
300FDD6F48	Dikme - CFCHS48.3X3	S 355	NC3	25.000	0.14	0.14	0.00
300FDD6F49	Dikme - CFCHS48.3X3	S 355	NC1	0.000	0.11	0.11	0.00
300FDD6F50	Dikme - CFCHS48.3X3	S 355	NC3	225.000	0.14	0.14	0.00
300FDD6F51	Dikme - CFCHS48.3X3	S 355	NC1	0.000	0.11	0.11	0.00
300FDD6F52	Dikme - CFCHS48.3X3	S 355	NC3	25.000	0.14	0.14	0.00
300FDD6F53	Dikme - CFCHS48.3X3	S 355	NC1	0.000	0.11	0.11	0.00
300FDD6F54	Dikme - CFCHS48.3X3	S 355	NC3	225.000	0.14	0.14	0.00
300FDD6F55	Dikme - CFCHS48.3X3	S 355	NC1	0.000	0.11	0.11	0.00
300FDD6F56	Dikme - CFCHS48.3X3	S 355	NC3	25.000	0.15	0.15	0.00
300FDD6F57	Dikme - CFCHS48.3X3	S 355	NC1	0.000	0.11	0.11	0.00
300FDD6F58	Dikme - CFCHS48.3X3	S 355	NC3	225.000	0.14	0.14	0.00
300FDD6F59	Dikme - CFCHS48.3X3	S 355	NC2	0.000	0.11	0.11	0.00
300FDD6F60	Dikme - CFCHS48.3X3	S 355	NC3	25.000	0.14	0.14	0.00
300FDD6F61	Dikme - CFCHS48.3X3	S 355	NC1	0.000	0.11	0.11	0.00
300FDD6F62	Dikme - CFCHS48.3X3	S 355	NC3	225.000	0.15	0.15	0.00
300FDD6F63	Dikme - CFCHS48.3X3	S 355	NC3	25.000	0.08	0.08	0.00
300FDD6F64	Dikme - CFCHS48.3X3	S 355	NC2	0.000	0.07	0.07	0.00
300FDD6F65	Dikme - CFCHS48.3X3	S 355	NC3	125.000	0.07	0.07	0.00
300FDD6F66	Dikme - CFCHS48.3X3	S 355	NC3	125.000	0.08	0.08	0.00
300FDD6F67	Dikme - CFCHS48.3X3	S 355	NC2	0.000	0.09	0.09	0.00
300FDD6F68	Dikme - CFCHS48.3X3	S 355	NC3	125.000	0.11	0.11	0.00
300FDD6F69	Dikme - CFCHS48.3X3	S 355	NC1	0.000	0.10	0.10	0.00
300FDD6F70	Dikme - CFCHS48.3X3	S 355	NC3	125.000	0.14	0.14	0.00
300FDD6F71	Dikme - CFCHS48.3X3	S 355	NC1	0.000	0.10	0.10	0.00

Member	css	mat	Case	dx [cm]	un.check [-]	sec.check [-]	stab.check [-]
300FDD6F72	Dikme - CFCHS48.3X3	S 355	NC3	125.000	0.12	0.12	0.00
300FDD6F73	Dikme - CFCHS48.3X3	S 355	NC1	0.000	0.10	0.10	0.00
300FDD6F74	Dikme - CFCHS48.3X3	S 355	NC3	125.000	0.14	0.14	0.00
300FDD6F75	Dikme - CFCHS48.3X3	S 355	NC1	0.000	0.10	0.10	0.00
300FDD6F76	Dikme - CFCHS48.3X3	S 355	NC3	125.000	0.12	0.12	0.00
300FDD6F77	Dikme - CFCHS48.3X3	S 355	NC2	0.000	0.10	0.10	0.00
300FDD6F78	Dikme - CFCHS48.3X3	S 355	NC3	125.000	0.15	0.15	0.00
300FDD6F79	Dikme - CFCHS48.3X3	S 355	NC1	0.000	0.10	0.10	0.00
300FDD6F80	Dikme - CFCHS48.3X3	S 355	NC3	125.000	0.12	0.12	0.00
300FDD6F81	Dikme - CFCHS48.3X3	S 355	NC1	0.000	0.10	0.10	0.00
300FDD6F82	Dikme - CFCHS48.3X3	S 355	NC3	125.000	0.14	0.14	0.00
300FDD6F83	Dikme - CFCHS48.3X3	S 355	NC1	0.000	0.10	0.10	0.00
300FDD6F84	Dikme - CFCHS48.3X3	S 355	NC3	125.000	0.11	0.11	0.00
300FDD6F85	Dikme - CFCHS48.3X3	S 355	NC3	125.000	0.08	0.08	0.00
300FDD6F86	Dikme - CFCHS48.3X3	S 355	NC3	125.000	0.07	0.07	0.00
300FDD6F87	Dikme - CFCHS48.3X3	S 355	NC3	225.000	0.08	0.08	0.00
300FDD6F88	Dikme - CFCHS48.3X3	S 355	NC3	225.000	0.08	0.08	0.00
300FDD6F89	Dikme - CFCHS48.3X3	S 355	NC1	0.000	0.09	0.09	0.00
300FDD6F90	Dikme - CFCHS48.3X3	S 355	NC3	25.000	0.15	0.15	0.00
300FDD6F91	Dikme - CFCHS48.3X3	S 355	NC1	0.000	0.09	0.09	0.00
300FDD6F92	Dikme - CFCHS48.3X3	S 355	NC3	225.000	0.14	0.14	0.00
300FDD6F93	Dikme - CFCHS48.3X3	S 355	NC1	0.000	0.09	0.09	0.00
300FDD6F94	Dikme - CFCHS48.3X3	S 355	NC3	25.000	0.14	0.14	0.00
300FDD6F95	Dikme - CFCHS48.3X3	S 355	NC1	0.000	0.09	0.09	0.00
300FDD6F96	Dikme - CFCHS48.3X3	S 355	NC3	225.000	0.14	0.14	0.00
300FDD6F97	Dikme - CFCHS48.3X3	S 355	NC1	0.000	0.09	0.09	0.00
300FDD6F98	Dikme - CFCHS48.3X3	S 355	NC3	25.000	0.14	0.14	0.00
300FDD6F99	Dikme - CFCHS48.3X3	S 355	NC1	0.000	0.09	0.09	0.00
300FDD6F100	Dikme - CFCHS48.3X3	S 355	NC3	225.000	0.15	0.15	0.00
300FDD6F101	Dikme - CFCHS48.3X3	S 355	NC1	0.000	0.09	0.09	0.00
300FDD6F102	Dikme - CFCHS48.3X3	S 355	NC3	25.000	0.14	0.14	0.00
300FDD6F103	Dikme - CFCHS48.3X3	S 355	NC1	0.000	0.09	0.09	0.00
300FDD6F104	Dikme - CFCHS48.3X3	S 355	NC3	225.000	0.14	0.14	0.00
300FDD6F105	Dikme - CFCHS48.3X3	S 355	NC1	0.000	0.09	0.09	0.00
300FDD6F106	Dikme - CFCHS48.3X3	S 355	NC3	25.000	0.15	0.15	0.00
300FDD6F107	Dikme - CFCHS48.3X3	S 355	NC3	225.000	0.08	0.08	0.00
300FDD6F108	Dikme - CFCHS48.3X3	S 355	NC3	225.000	0.07	0.07	0.00
300FDD6F109	Dikme - CFCHS48.3X3	S 355	NC1	0.000	0.05	0.05	0.00
300FDD6F110	Dikme - CFCHS48.3X3	S 355	NC1	25.000	0.06	0.06	0.00
300FDD6F111	Dikme - CFCHS48.3X3	S 355	NC1	0.000	0.08	0.08	0.00
300FDD6F112	Dikme - CFCHS48.3X3	S 355	NC3	125.000	0.16	0.16	0.00
300FDD6F113	Dikme - CFCHS48.3X3	S 355	NC1	0.000	0.08	0.08	0.00
300FDD6F114	Dikme - CFCHS48.3X3	S 355	NC3	125.000	0.12	0.12	0.00
300FDD6F115	Dikme - CFCHS48.3X3	S 355	NC1	0.000	0.08	0.08	0.00
300FDD6F116	Dikme - CFCHS48.3X3	S 355	NC3	125.000	0.14	0.14	0.00
300FDD6F117	Dikme - CFCHS48.3X3	S 355	NC1	0.000	0.08	0.08	0.00
300FDD6F118	Dikme - CFCHS48.3X3	S 355	NC3	125.000	0.12	0.12	0.00
300FDD6F119	Dikme - CFCHS48.3X3	S 355	NC1	0.000	0.08	0.08	0.00
300FDD6F120	Dikme - CFCHS48.3X3	S 355	NC3	125.000	0.15	0.15	0.00
300FDD6F121	Dikme - CFCHS48.3X3	S 355	NC1	0.000	0.08	0.08	0.00
300FDD6F122	Dikme - CFCHS48.3X3	S 355	NC3	125.000	0.13	0.13	0.00
300FDD6F123	Dikme - CFCHS48.3X3	S 355	NC1	0.000	0.08	0.08	0.00
300FDD6F124	Dikme - CFCHS48.3X3	S 355	NC3	125.000	0.14	0.14	0.00
300FDD6F125	Dikme - CFCHS48.3X3	S 355	NC1	0.000	0.08	0.08	0.00
300FDD6F126	Dikme - CFCHS48.3X3	S 355	NC3	125.000	0.12	0.12	0.00
300FDD6F127	Dikme - CFCHS48.3X3	S 355	NC1	0.000	0.08	0.08	0.00
300FDD6F128	Dikme - CFCHS48.3X3	S 355	NC3	125.000	0.16	0.16	0.00
300FDD6F129	Dikme - CFCHS48.3X3	S 355	NC1	0.000	0.05	0.05	0.00
300FDD6F130	Dikme - CFCHS48.3X3	S 355	NC2	0.000	0.05	0.05	0.00
300FDD6F131	Dikme - CFCHS48.3X3	S 355	NC3	25.000	0.08	0.08	0.00
300FDD6F132	Dikme - CFCHS48.3X3	S 355	NC3	25.000	0.09	0.09	0.00
300FDD6F133	Dikme - CFCHS48.3X3	S 355	NC1	225.000	0.08	0.08	0.00
300FDD6F134	Dikme - CFCHS48.3X3	S 355	NC3	225.000	0.18	0.18	0.00
300FDD6F135	Dikme - CFCHS48.3X3	S 355	NC2	225.000	0.09	0.09	0.00
300FDD6F136	Dikme - CFCHS48.3X3	S 355	NC3	225.000	0.14	0.14	0.00
300FDD6F137	Dikme - CFCHS48.3X3	S 355	NC2	225.000	0.09	0.09	0.00
300FDD6F138	Dikme - CFCHS48.3X3	S 355	NC3	225.000	0.16	0.16	0.00
300FDD6F139	Dikme - CFCHS48.3X3	S 355	NC2	225.000	0.09	0.09	0.00
300FDD6F140	Dikme - CFCHS48.3X3	S 355	NC3	225.000	0.14	0.14	0.00
300FDD6F141	Dikme - CFCHS48.3X3	S 355	NC1	225.000	0.09	0.09	0.00
300FDD6F142	Dikme - CFCHS48.3X3	S 355	NC3	225.000	0.17	0.17	0.00
300FDD6F143	Dikme - CFCHS48.3X3	S 355	NC2	225.000	0.09	0.09	0.00
300FDD6F144	Dikme - CFCHS48.3X3	S 355	NC3	25.000	0.15	0.15	0.00
300FDD6F145	Dikme - CFCHS48.3X3	S 355	NC2	225.000	0.09	0.09	0.00
300FDD6F146	Dikme - CFCHS48.3X3	S 355	NC3	225.000	0.16	0.16	0.00
300FDD6F147	Dikme - CFCHS48.3X3	S 355	NC2	225.000	0.09	0.09	0.00

Member	css	mat	Case	dx [cm]	un.check [-]	sec.check [-]	stab.check [-]
300FDD6F148	Dikme - CFCHS48.3X3	S 355	NC3	225.000	0.14	0.14	0.00
300FDD6F149	Dikme - CFCHS48.3X3	S 355	NC1	225.000	0.09	0.09	0.00
300FDD6F150	Dikme - CFCHS48.3X3	S 355	NC3	225.000	0.18	0.18	0.00
300FDD6F151	Dikme - CFCHS48.3X3	S 355	NC3	25.000	0.09	0.09	0.00
300FDD6F152	Dikme - CFCHS48.3X3	S 355	NC1	225.000	0.08	0.08	0.00
300FDD6F153	Dikme - CFCHS48.3X3	S 355	NC4	125.000	0.08	0.08	0.00
300FDD6F154	Dikme - CFCHS48.3X3	S 355	NC3	125.000	0.07	0.07	0.00
300FDD6F155	Dikme - CFCHS48.3X3	S 355	NC3	125.000	0.08	0.08	0.00
300FDD6F156	Dikme - CFCHS48.3X3	S 355	NC3	125.000	0.25	0.25	0.00
300FDD6F157	Dikme - CFCHS48.3X3	S 355	NC3	125.000	0.09	0.09	0.00
300FDD6F158	Dikme - CFCHS48.3X3	S 355	NC3	125.000	0.24	0.24	0.00
300FDD6F159	Dikme - CFCHS48.3X3	S 355	NC3	125.000	0.08	0.08	0.00
300FDD6F160	Dikme - CFCHS48.3X3	S 355	NC3	125.000	0.24	0.24	0.00
300FDD6F161	Dikme - CFCHS48.3X3	S 355	NC3	125.000	0.09	0.09	0.00
300FDD6F162	Dikme - CFCHS48.3X3	S 355	NC3	125.000	0.24	0.24	0.00
300FDD6F163	Dikme - CFCHS48.3X3	S 355	NC3	125.000	0.08	0.08	0.00
300FDD6F164	Dikme - CFCHS48.3X3	S 355	NC3	125.000	0.24	0.24	0.00
300FDD6F165	Dikme - CFCHS48.3X3	S 355	NC3	125.000	0.09	0.09	0.00
300FDD6F166	Dikme - CFCHS48.3X3	S 355	NC3	125.000	0.25	0.25	0.00
300FDD6F167	Dikme - CFCHS48.3X3	S 355	NC3	125.000	0.08	0.08	0.00
300FDD6F168	Dikme - CFCHS48.3X3	S 355	NC3	125.000	0.24	0.24	0.00
300FDD6F169	Dikme - CFCHS48.3X3	S 355	NC3	125.000	0.09	0.09	0.00
300FDD6F170	Dikme - CFCHS48.3X3	S 355	NC3	125.000	0.24	0.24	0.00
300FDD6F171	Dikme - CFCHS48.3X3	S 355	NC3	125.000	0.08	0.08	0.00
300FDD6F172	Dikme - CFCHS48.3X3	S 355	NC3	125.000	0.24	0.24	0.00
300FDD6F173	Dikme - CFCHS48.3X3	S 355	NC3	125.000	0.09	0.09	0.00
300FDD6F174	Dikme - CFCHS48.3X3	S 355	NC3	125.000	0.07	0.07	0.00
300YKB1	Yatay - CFCHS48.3X2.5	S 355	NC3	149.999	0.05	0.05	0.00
300YKB2	Yatay - CFCHS48.3X2.5	S 355	NC3	149.999	0.05	0.05	0.00
300YKB4	Yatay - CFCHS48.3X2.5	S 355	NC3	149.999	0.05	0.05	0.00
300YKB5	Yatay - CFCHS48.3X2.5	S 355	NC3	149.999	0.05	0.05	0.00
300YKB7	Yatay - CFCHS48.3X2.5	S 355	NC3	149.999	0.05	0.05	0.00
300YKB8	Yatay - CFCHS48.3X2.5	S 355	NC3	149.999	0.05	0.05	0.00
300YKB10	Yatay - CFCHS48.3X2.5	S 355	NC3	149.999	0.05	0.05	0.00
300YKB11	Yatay - CFCHS48.3X2.5	S 355	NC3	149.999	0.05	0.05	0.00
300YKB13	Yatay - CFCHS48.3X2.5	S 355	NC3	149.999	0.05	0.05	0.00
300YKB14	Yatay - CFCHS48.3X2.5	S 355	NC3	149.999	0.05	0.05	0.00
300YKB16	Yatay - CFCHS48.3X2.5	S 355	NC3	149.999	0.05	0.05	0.00
300YKB17	Yatay - CFCHS48.3X2.5	S 355	NC3	149.999	0.05	0.05	0.00
300YKB19	Yatay - CFCHS48.3X2.5	S 355	NC3	149.999	0.05	0.05	0.00
300YKB20	Yatay - CFCHS48.3X2.5	S 355	NC3	149.999	0.05	0.05	0.00
300YKB22	Yatay - CFCHS48.3X2.5	S 355	NC3	149.999	0.05	0.05	0.00
300YKB23	Yatay - CFCHS48.3X2.5	S 355	NC3	149.999	0.05	0.05	0.00
300YKB25	Yatay - CFCHS48.3X2.5	S 355	NC3	149.999	0.05	0.05	0.00
300YKB26	Yatay - CFCHS48.3X2.5	S 355	NC3	149.999	0.05	0.05	0.00
300YKB28	Yatay - CFCHS48.3X2.5	S 355	NC3	149.999	0.05	0.05	0.00
300YKB29	Yatay - CFCHS48.3X2.5	S 355	NC3	149.999	0.05	0.05	0.00
300YKB31	Yatay - CFCHS48.3X2.5	S 355	NC3	149.999	0.05	0.05	0.00
300YKB32	Yatay - CFCHS48.3X2.5	S 355	NC3	149.999	0.05	0.05	0.00
300YKB34	Yatay - CFCHS48.3X2.5	S 355	NC3	149.999	0.05	0.05	0.00
300YKB35	Yatay - CFCHS48.3X2.5	S 355	NC3	150.001	0.05	0.05	0.00
300YKB37	Yatay - CFCHS48.3X2.5	S 355	NC3	149.999	0.05	0.05	0.00
300YKB38	Yatay - CFCHS48.3X2.5	S 355	NC3	149.999	0.05	0.05	0.00
300YKB40	Yatay - CFCHS48.3X2.5	S 355	NC3	149.999	0.05	0.05	0.00
300YKB41	Yatay - CFCHS48.3X2.5	S 355	NC3	149.999	0.05	0.05	0.00
300YKB43	Yatay - CFCHS48.3X2.5	S 355	NC3	149.999	0.05	0.05	0.00
300YKB44	Yatay - CFCHS48.3X2.5	S 355	NC3	149.999	0.05	0.05	0.00
300YKB46	Yatay - CFCHS48.3X2.5	S 355	NC3	149.999	0.05	0.05	0.00
300YKB47	Yatay - CFCHS48.3X2.5	S 355	NC3	149.999	0.05	0.05	0.00
300YKB49	Yatay - CFCHS48.3X2.5	S 355	NC3	150.001	0.05	0.05	0.00
300YKB50	Yatay - CFCHS48.3X2.5	S 355	NC3	149.999	0.05	0.05	0.00
300YKB52	Yatay - CFCHS48.3X2.5	S 355	NC3	149.999	0.05	0.05	0.00
300YKB53	Yatay - CFCHS48.3X2.5	S 355	NC3	149.999	0.05	0.05	0.00
300YKB55	Yatay - CFCHS48.3X2.5	S 355	NC3	149.999	0.05	0.05	0.00
300YKB56	Yatay - CFCHS48.3X2.5	S 355	NC3	149.999	0.05	0.05	0.00
300YKB58	Yatay - CFCHS48.3X2.5	S 355	NC3	149.999	0.05	0.05	0.00
300YKB59	Yatay - CFCHS48.3X2.5	S 355	NC3	149.999	0.05	0.05	0.00
300YKB61	Yatay - CFCHS48.3X2.5	S 355	NC3	149.999	0.05	0.05	0.00
300YKB62	Yatay - CFCHS48.3X2.5	S 355	NC3	149.999	0.05	0.05	0.00
300YKB64	Yatay - CFCHS48.3X2.5	S 355	NC3	150.001	0.05	0.05	0.00
300YKB65	Yatay - CFCHS48.3X2.5	S 355	NC3	149.999	0.05	0.05	0.00
300YKB67	Yatay - CFCHS48.3X2.5	S 355	NC3	149.999	0.05	0.05	0.00
300YKB68	Yatay - CFCHS48.3X2.5	S 355	NC3	149.999	0.05	0.05	0.00
300YKB70	Yatay - CFCHS48.3X2.5	S 355	NC3	149.999	0.05	0.05	0.00
300YKB71	Yatay - CFCHS48.3X2.5	S 355	NC3	149.999	0.05	0.05	0.00
300YKB73	Yatay - CFCHS48.3X2.5	S 355	NC3	149.999	0.05	0.05	0.00

Member	css	mat	Case	dx [cm]	un.check [-]	sec.check [-]	stab.check [-]
300YKB74	Yatay - CFCHS48.3X2.5	S 355	NC3	149.999	0.05	0.05	0.00
300YKB76	Yatay - CFCHS48.3X2.5	S 355	NC3	149.999	0.05	0.05	0.00
300YKB77	Yatay - CFCHS48.3X2.5	S 355	NC3	149.999	0.05	0.05	0.00
300YKB79	Yatay - CFCHS48.3X2.5	S 355	NC3	149.999	0.05	0.05	0.00
300YKB80	Yatay - CFCHS48.3X2.5	S 355	NC3	149.999	0.05	0.05	0.00
300YKB82	Yatay - CFCHS48.3X2.5	S 355	NC3	149.999	0.05	0.05	0.00
300YKB83	Yatay - CFCHS48.3X2.5	S 355	NC3	149.999	0.05	0.05	0.00
300YKB85	Yatay - CFCHS48.3X2.5	S 355	NC3	149.999	0.05	0.05	0.00
300YKB86	Yatay - CFCHS48.3X2.5	S 355	NC3	149.999	0.05	0.05	0.00
300YKB88	Yatay - CFCHS48.3X2.5	S 355	NC3	150.001	0.05	0.05	0.00
300YKB89	Yatay - CFCHS48.3X2.5	S 355	NC3	149.999	0.05	0.05	0.00
300YKB91	Yatay - CFCHS48.3X2.5	S 355	NC3	149.999	0.05	0.05	0.00
300YKB92	Yatay - CFCHS48.3X2.5	S 355	NC3	149.999	0.05	0.05	0.00
300YKB94	Yatay - CFCHS48.3X2.5	S 355	NC3	150.001	0.05	0.05	0.00
300YKB95	Yatay - CFCHS48.3X2.5	S 355	NC3	150.001	0.05	0.05	0.00
300YKB97	Yatay - CFCHS48.3X2.5	S 355	NC3	149.999	0.05	0.05	0.00
300YKB98	Yatay - CFCHS48.3X2.5	S 355	NC3	149.999	0.05	0.05	0.00
300YKB100	Yatay - CFCHS48.3X2.5	S 355	NC3	149.999	0.05	0.05	0.00
300YKB101	Yatay - CFCHS48.3X2.5	S 355	NC3	149.999	0.05	0.05	0.00
300YKB103	Yatay - CFCHS48.3X2.5	S 355	NC3	149.999	0.05	0.05	0.00
300YKB104	Yatay - CFCHS48.3X2.5	S 355	NC3	149.999	0.05	0.05	0.00
300YKB106	Yatay - CFCHS48.3X2.5	S 355	NC3	149.999	0.05	0.05	0.00
300YKB107	Yatay - CFCHS48.3X2.5	S 355	NC3	149.999	0.05	0.05	0.00
300YKB109	Yatay - CFCHS48.3X2.5	S 355	NC3	149.999	0.05	0.05	0.00
300YKB110	Yatay - CFCHS48.3X2.5	S 355	NC3	149.999	0.05	0.05	0.00
300YKB112	Yatay - CFCHS48.3X2.5	S 355	NC3	149.999	0.05	0.05	0.00
300YKB113	Yatay - CFCHS48.3X2.5	S 355	NC3	149.999	0.05	0.05	0.00
300YKB115	Yatay - CFCHS48.3X2.5	S 355	NC3	149.999	0.05	0.05	0.00
300YKB116	Yatay - CFCHS48.3X2.5	S 355	NC3	149.999	0.05	0.05	0.00
300YKB118	Yatay - CFCHS48.3X2.5	S 355	NC3	149.999	0.05	0.05	0.00
300YKB119	Yatay - CFCHS48.3X2.5	S 355	NC3	149.999	0.05	0.05	0.00
300YKB121	Yatay - CFCHS48.3X2.5	S 355	NC3	149.999	0.06	0.06	0.00
300YKB122	Yatay - CFCHS48.3X2.5	S 355	NC3	149.999	0.06	0.06	0.00
300YKB124	Yatay - CFCHS48.3X2.5	S 355	NC3	150.001	0.05	0.05	0.00
300YKB125	Yatay - CFCHS48.3X2.5	S 355	NC3	150.001	0.05	0.05	0.00
300YKB127	Yatay - CFCHS48.3X2.5	S 355	NC3	149.999	0.05	0.05	0.00
300YKB128	Yatay - CFCHS48.3X2.5	S 355	NC3	149.999	0.05	0.05	0.00
300YKB130	Yatay - CFCHS48.3X2.5	S 355	NC3	149.999	0.05	0.05	0.00
300YKB131	Yatay - CFCHS48.3X2.5	S 355	NC3	149.999	0.05	0.05	0.00
300YKB133	Yatay - CFCHS48.3X2.5	S 355	NC3	149.999	0.05	0.05	0.00
300YKB134	Yatay - CFCHS48.3X2.5	S 355	NC3	149.999	0.05	0.05	0.00
300YKB136	Yatay - CFCHS48.3X2.5	S 355	NC3	149.999	0.05	0.05	0.00
300YKB137	Yatay - CFCHS48.3X2.5	S 355	NC3	149.999	0.05	0.05	0.00
300YKB139	Yatay - CFCHS48.3X2.5	S 355	NC3	149.999	0.05	0.05	0.00
300YKB140	Yatay - CFCHS48.3X2.5	S 355	NC3	149.999	0.05	0.05	0.00
300YKB142	Yatay - CFCHS48.3X2.5	S 355	NC3	149.999	0.05	0.05	0.00
300YKB143	Yatay - CFCHS48.3X2.5	S 355	NC3	149.999	0.05	0.05	0.00
300YKB145	Yatay - CFCHS48.3X2.5	S 355	NC3	149.999	0.05	0.05	0.00
300YKB146	Yatay - CFCHS48.3X2.5	S 355	NC3	149.999	0.05	0.05	0.00
300YKB148	Yatay - CFCHS48.3X2.5	S 355	NC3	150.001	0.05	0.05	0.00
300YKB149	Yatay - CFCHS48.3X2.5	S 355	NC3	150.001	0.05	0.05	0.00
300YKB151	Yatay - CFCHS48.3X2.5	S 355	NC3	149.999	0.06	0.06	0.00
300YKB152	Yatay - CFCHS48.3X2.5	S 355	NC3	149.999	0.06	0.06	0.00
300YKB154	Yatay - CFCHS48.3X2.5	S 355	NC3	150.001	0.05	0.05	0.00
300YKB155	Yatay - CFCHS48.3X2.5	S 355	NC3	150.001	0.05	0.05	0.00
300YKB157	Yatay - CFCHS48.3X2.5	S 355	NC3	149.999	0.05	0.05	0.00
300YKB158	Yatay - CFCHS48.3X2.5	S 355	NC3	149.999	0.05	0.05	0.00
300YKB160	Yatay - CFCHS48.3X2.5	S 355	NC3	149.999	0.05	0.05	0.00
300YKB161	Yatay - CFCHS48.3X2.5	S 355	NC3	149.999	0.05	0.05	0.00
300YKB163	Yatay - CFCHS48.3X2.5	S 355	NC3	149.999	0.05	0.05	0.00
300YKB164	Yatay - CFCHS48.3X2.5	S 355	NC3	149.999	0.05	0.05	0.00
300YKB166	Yatay - CFCHS48.3X2.5	S 355	NC3	149.999	0.05	0.05	0.00
300YKB167	Yatay - CFCHS48.3X2.5	S 355	NC3	149.999	0.05	0.05	0.00
300YKB169	Yatay - CFCHS48.3X2.5	S 355	NC3	149.999	0.05	0.05	0.00
300YKB170	Yatay - CFCHS48.3X2.5	S 355	NC3	149.999	0.05	0.05	0.00
300YKB172	Yatay - CFCHS48.3X2.5	S 355	NC3	149.999	0.05	0.05	0.00
300YKB173	Yatay - CFCHS48.3X2.5	S 355	NC3	149.999	0.05	0.05	0.00
300YKB175	Yatay - CFCHS48.3X2.5	S 355	NC3	149.999	0.05	0.05	0.00
300YKB176	Yatay - CFCHS48.3X2.5	S 355	NC3	149.999	0.05	0.05	0.00
300YKB178	Yatay - CFCHS48.3X2.5	S 355	NC3	149.999	0.05	0.05	0.00
300YKB179	Yatay - CFCHS48.3X2.5	S 355	NC3	149.999	0.05	0.05	0.00
300YKB181	Yatay - CFCHS48.3X2.5	S 355	NC3	149.999	0.06	0.06	0.00
300YKB182	Yatay - CFCHS48.3X2.5	S 355	NC3	149.999	0.06	0.06	0.00
300YKB184	Yatay - CFCHS48.3X2.5	S 355	NC3	150.001	0.05	0.05	0.00
300YKB185	Yatay - CFCHS48.3X2.5	S 355	NC3	150.001	0.05	0.05	0.00
300YKB187	Yatay - CFCHS48.3X2.5	S 355	NC3	149.999	0.05	0.05	0.00

Member	css	mat	Case	dx [cm]	un.check [-]	sec.check [-]	stab.check [-]
300YKB188	Yatay - CFCHS48.3X2.5	S 355	NC3	149.999	0.05	0.05	0.00
300YKB190	Yatay - CFCHS48.3X2.5	S 355	NC3	149.999	0.05	0.05	0.00
300YKB191	Yatay - CFCHS48.3X2.5	S 355	NC3	149.999	0.05	0.05	0.00
300YKB193	Yatay - CFCHS48.3X2.5	S 355	NC3	149.999	0.05	0.05	0.00
300YKB194	Yatay - CFCHS48.3X2.5	S 355	NC3	149.999	0.05	0.05	0.00
300YKB196	Yatay - CFCHS48.3X2.5	S 355	NC3	150.001	0.05	0.05	0.00
300YKB197	Yatay - CFCHS48.3X2.5	S 355	NC3	149.999	0.05	0.05	0.00
300YKB199	Yatay - CFCHS48.3X2.5	S 355	NC3	149.999	0.05	0.05	0.00
300YKB200	Yatay - CFCHS48.3X2.5	S 355	NC3	149.999	0.05	0.05	0.00
300YKB202	Yatay - CFCHS48.3X2.5	S 355	NC3	149.999	0.05	0.05	0.00
300YKB203	Yatay - CFCHS48.3X2.5	S 355	NC3	149.999	0.05	0.05	0.00
300YKB205	Yatay - CFCHS48.3X2.5	S 355	NC3	149.999	0.05	0.05	0.00
300YKB206	Yatay - CFCHS48.3X2.5	S 355	NC3	149.999	0.05	0.05	0.00
300YKB208	Yatay - CFCHS48.3X2.5	S 355	NC3	150.001	0.06	0.06	0.00
300YKB209	Yatay - CFCHS48.3X2.5	S 355	NC3	150.001	0.06	0.06	0.00
300YKB211	Yatay - CFCHS48.3X2.5	S 355	NC3	149.999	0.06	0.06	0.00
300YKB212	Yatay - CFCHS48.3X2.5	S 355	NC3	149.999	0.06	0.06	0.00
300YKB214	Yatay - CFCHS48.3X2.5	S 355	NC3	150.001	0.05	0.05	0.00
300YKB215	Yatay - CFCHS48.3X2.5	S 355	NC3	150.001	0.05	0.05	0.00
300YKB217	Yatay - CFCHS48.3X2.5	S 355	NC3	149.999	0.06	0.06	0.00
300YKB218	Yatay - CFCHS48.3X2.5	S 355	NC3	149.999	0.06	0.06	0.00
300YKB220	Yatay - CFCHS48.3X2.5	S 355	NC3	149.999	0.05	0.05	0.00
300YKB221	Yatay - CFCHS48.3X2.5	S 355	NC3	149.999	0.06	0.06	0.00
300YKB223	Yatay - CFCHS48.3X2.5	S 355	NC3	149.999	0.05	0.05	0.00
300YKB224	Yatay - CFCHS48.3X2.5	S 355	NC3	149.999	0.05	0.05	0.00
300YKB226	Yatay - CFCHS48.3X2.5	S 355	NC3	149.999	0.06	0.06	0.00
300YKB227	Yatay - CFCHS48.3X2.5	S 355	NC3	149.999	0.06	0.06	0.00
300YKB229	Yatay - CFCHS48.3X2.5	S 355	NC3	149.999	0.05	0.05	0.00
300YKB230	Yatay - CFCHS48.3X2.5	S 355	NC3	149.999	0.05	0.05	0.00
300YKB232	Yatay - CFCHS48.3X2.5	S 355	NC3	149.999	0.05	0.05	0.00
300YKB233	Yatay - CFCHS48.3X2.5	S 355	NC3	149.999	0.06	0.06	0.00
300YKB235	Yatay - CFCHS48.3X2.5	S 355	NC3	149.999	0.05	0.05	0.00
300YKB236	Yatay - CFCHS48.3X2.5	S 355	NC3	149.999	0.05	0.05	0.00
300YKB238	Yatay - CFCHS48.3X2.5	S 355	NC3	149.999	0.06	0.06	0.00
300YKB239	Yatay - CFCHS48.3X2.5	S 355	NC3	150.001	0.06	0.06	0.00
300YKB241	Yatay - CFCHS48.3X2.5	S 355	NC3	149.999	0.06	0.06	0.00
300YKB242	Yatay - CFCHS48.3X2.5	S 355	NC3	149.999	0.06	0.06	0.00
300YKB244	Yatay - CFCHS48.3X2.5	S 355	NC3	150.001	0.05	0.05	0.00
300YKB245	Yatay - CFCHS48.3X2.5	S 355	NC3	150.001	0.06	0.06	0.00
300YKB247	Yatay - CFCHS48.3X2.5	S 355	NC3	149.999	0.06	0.06	0.00
300YKB248	Yatay - CFCHS48.3X2.5	S 355	NC3	149.999	0.06	0.06	0.00
300YKB250	Yatay - CFCHS48.3X2.5	S 355	NC3	149.999	0.06	0.06	0.00
300YKB251	Yatay - CFCHS48.3X2.5	S 355	NC3	149.999	0.06	0.06	0.00
300YKB253	Yatay - CFCHS48.3X2.5	S 355	NC3	149.999	0.06	0.06	0.00
300YKB254	Yatay - CFCHS48.3X2.5	S 355	NC3	149.999	0.06	0.06	0.00
300YKB256	Yatay - CFCHS48.3X2.5	S 355	NC3	150.001	0.06	0.06	0.00
300YKB257	Yatay - CFCHS48.3X2.5	S 355	NC3	149.999	0.06	0.06	0.00
300YKB259	Yatay - CFCHS48.3X2.5	S 355	NC3	149.999	0.06	0.06	0.00
300YKB260	Yatay - CFCHS48.3X2.5	S 355	NC3	149.999	0.06	0.06	0.00
300YKB262	Yatay - CFCHS48.3X2.5	S 355	NC3	149.999	0.06	0.06	0.00
300YKB263	Yatay - CFCHS48.3X2.5	S 355	NC3	149.999	0.06	0.06	0.00
300YKB265	Yatay - CFCHS48.3X2.5	S 355	NC3	149.999	0.06	0.06	0.00
300YKB266	Yatay - CFCHS48.3X2.5	S 355	NC3	149.999	0.06	0.06	0.00
300YKB268	Yatay - CFCHS48.3X2.5	S 355	NC3	150.001	0.06	0.06	0.00
300YKB269	Yatay - CFCHS48.3X2.5	S 355	NC3	150.001	0.06	0.06	0.00
300YKB271	Yatay - CFCHS48.3X2.5	S 355	NC3	149.999	0.06	0.06	0.00
300YKB272	Yatay - CFCHS48.3X2.5	S 355	NC3	149.999	0.06	0.06	0.00
300YKB274	Yatay - CFCHS48.3X2.5	S 355	NC3	150.001	0.06	0.06	0.00
300YKB275	Yatay - CFCHS48.3X2.5	S 355	NC3	150.001	0.06	0.06	0.00
300YKB277	Yatay - CFCHS48.3X2.5	S 355	NC3	149.999	0.06	0.06	0.00
300YKB278	Yatay - CFCHS48.3X2.5	S 355	NC3	149.999	0.06	0.06	0.00
300YKB280	Yatay - CFCHS48.3X2.5	S 355	NC3	149.999	0.06	0.06	0.00
300YKB281	Yatay - CFCHS48.3X2.5	S 355	NC3	149.999	0.06	0.06	0.00
300YKB283	Yatay - CFCHS48.3X2.5	S 355	NC3	149.999	0.06	0.06	0.00
300YKB284	Yatay - CFCHS48.3X2.5	S 355	NC3	149.999	0.06	0.06	0.00
300YKB286	Yatay - CFCHS48.3X2.5	S 355	NC3	149.999	0.06	0.06	0.00
300YKB287	Yatay - CFCHS48.3X2.5	S 355	NC3	149.999	0.06	0.06	0.00
300YKB289	Yatay - CFCHS48.3X2.5	S 355	NC3	149.999	0.06	0.06	0.00
300YKB290	Yatay - CFCHS48.3X2.5	S 355	NC3	149.999	0.06	0.06	0.00
300YKB292	Yatay - CFCHS48.3X2.5	S 355	NC3	149.999	0.06	0.06	0.00
300YKB293	Yatay - CFCHS48.3X2.5	S 355	NC3	149.999	0.06	0.06	0.00
300YKB295	Yatay - CFCHS48.3X2.5	S 355	NC3	149.999	0.06	0.06	0.00
300YKB296	Yatay - CFCHS48.3X2.5	S 355	NC3	149.999	0.06	0.06	0.00
300YKB298	Yatay - CFCHS48.3X2.5	S 355	NC3	149.999	0.06	0.06	0.00
300YKB299	Yatay - CFCHS48.3X2.5	S 355	NC3	150.001	0.06	0.06	0.00
300YKB301	Yatay - CFCHS48.3X2.5	S 355	NC3	149.999	0.07	0.07	0.00

Member	css	mat	Case	dx [cm]	un.check [-]	sec.check [-]	stab.check [-]
300YKB302	Yatay - CFCHS48.3X2.5	S 355	NC3	149.999	0.07	0.07	0.00
300YKB304	Yatay - CFCHS48.3X2.5	S 355	NC3	150.001	0.06	0.06	0.00
300YKB305	Yatay - CFCHS48.3X2.5	S 355	NC3	150.001	0.06	0.06	0.00
300YKB307	Yatay - CFCHS48.3X2.5	S 355	NC3	149.999	0.06	0.06	0.00
300YKB308	Yatay - CFCHS48.3X2.5	S 355	NC3	149.999	0.06	0.06	0.00
300YKB310	Yatay - CFCHS48.3X2.5	S 355	NC3	149.999	0.06	0.06	0.00
300YKB311	Yatay - CFCHS48.3X2.5	S 355	NC3	149.999	0.06	0.06	0.00
300YKB313	Yatay - CFCHS48.3X2.5	S 355	NC3	149.999	0.06	0.06	0.00
300YKB314	Yatay - CFCHS48.3X2.5	S 355	NC3	149.999	0.06	0.06	0.00
300YKB316	Yatay - CFCHS48.3X2.5	S 355	NC3	150.001	0.06	0.06	0.00
300YKB317	Yatay - CFCHS48.3X2.5	S 355	NC3	150.001	0.06	0.06	0.00
300YKB319	Yatay - CFCHS48.3X2.5	S 355	NC3	149.999	0.06	0.06	0.00
300YKB320	Yatay - CFCHS48.3X2.5	S 355	NC3	149.999	0.06	0.06	0.00
300YKB322	Yatay - CFCHS48.3X2.5	S 355	NC3	149.999	0.06	0.06	0.00
300YKB323	Yatay - CFCHS48.3X2.5	S 355	NC3	149.999	0.06	0.06	0.00
300YKB325	Yatay - CFCHS48.3X2.5	S 355	NC3	149.999	0.06	0.06	0.00
300YKB326	Yatay - CFCHS48.3X2.5	S 355	NC3	149.999	0.06	0.06	0.00
300YKB328	Yatay - CFCHS48.3X2.5	S 355	NC3	150.001	0.06	0.06	0.00
300YKB329	Yatay - CFCHS48.3X2.5	S 355	NC3	150.001	0.06	0.06	0.00
300YKB331	Yatay - CFCHS48.3X2.5	S 355	NC3	149.999	0.07	0.07	0.00
300YKB332	Yatay - CFCHS48.3X2.5	S 355	NC3	149.999	0.07	0.07	0.00
300YKB334	Yatay - CFCHS48.3X2.5	S 355	NC3	149.999	0.06	0.06	0.00
300YKB335	Yatay - CFCHS48.3X2.5	S 355	NC3	149.999	0.06	0.06	0.00
300YKB337	Yatay - CFCHS48.3X2.5	S 355	NC3	150.001	0.06	0.06	0.00
300YKB338	Yatay - CFCHS48.3X2.5	S 355	NC3	150.001	0.06	0.06	0.00
300YKB340	Yatay - CFCHS48.3X2.5	S 355	NC3	149.999	0.06	0.06	0.00
300YKB341	Yatay - CFCHS48.3X2.5	S 355	NC3	149.999	0.06	0.06	0.00
300YKB343	Yatay - CFCHS48.3X2.5	S 355	NC3	150.001	0.06	0.06	0.00
300YKB344	Yatay - CFCHS48.3X2.5	S 355	NC3	150.001	0.06	0.06	0.00
300YKB346	Yatay - CFCHS48.3X2.5	S 355	NC3	149.999	0.06	0.06	0.00
300YKB347	Yatay - CFCHS48.3X2.5	S 355	NC3	149.999	0.06	0.06	0.00
300YKB349	Yatay - CFCHS48.3X2.5	S 355	NC3	150.001	0.06	0.06	0.00
300YKB350	Yatay - CFCHS48.3X2.5	S 355	NC3	150.001	0.06	0.06	0.00
300YKB352	Yatay - CFCHS48.3X2.5	S 355	NC3	149.999	0.06	0.06	0.00
300YKB353	Yatay - CFCHS48.3X2.5	S 355	NC3	149.999	0.06	0.06	0.00
300YKB355	Yatay - CFCHS48.3X2.5	S 355	NC3	150.001	0.06	0.06	0.00
300YKB356	Yatay - CFCHS48.3X2.5	S 355	NC3	150.001	0.06	0.06	0.00
300YKB358	Yatay - CFCHS48.3X2.5	S 355	NC3	149.999	0.06	0.06	0.00
300YKB359	Yatay - CFCHS48.3X2.5	S 355	NC3	149.999	0.06	0.06	0.00
110YKB	Yatay - CFCHS48.3X2.5	S 355	NC3	52.500	0.07	0.07	0.00
110YKB1	Yatay - CFCHS48.3X2.5	S 355	NC3	72.500	0.01	0.01	0.00
110YKB2	Yatay - CFCHS48.3X2.5	S 355	NC3	72.500	0.04	0.04	0.00
110YKB3	Yatay - CFCHS48.3X2.5	S 355	NC3	52.500	0.10	0.10	0.00
110YKB4	Yatay - CFCHS48.3X2.5	S 355	NC3	0.000	0.03	0.03	0.00
110YKB5	Yatay - CFCHS48.3X2.5	S 355	NC3	72.500	0.04	0.04	0.00
110YKB6	Yatay - CFCHS48.3X2.5	S 355	NC3	20.000	0.09	0.09	0.00
110YKB7	Yatay - CFCHS48.3X2.5	S 355	NC3	72.500	0.01	0.01	0.00
110YKB8	Yatay - CFCHS48.3X2.5	S 355	NC3	72.500	0.03	0.03	0.00
110YKB9	Yatay - CFCHS48.3X2.5	S 355	NC3	52.500	0.10	0.10	0.00
110YKB10	Yatay - CFCHS48.3X2.5	S 355	NC3	0.000	0.04	0.04	0.00
110YKB11	Yatay - CFCHS48.3X2.5	S 355	NC3	72.500	0.04	0.04	0.00
110YKB12	Yatay - CFCHS48.3X2.5	S 355	NC3	20.000	0.10	0.10	0.00
110YKB13	Yatay - CFCHS48.3X2.5	S 355	NC3	72.500	0.01	0.01	0.00
110YKB14	Yatay - CFCHS48.3X2.5	S 355	NC3	72.500	0.03	0.03	0.00
110YKB15	Yatay - CFCHS48.3X2.5	S 355	NC3	52.500	0.11	0.11	0.00
110YKB16	Yatay - CFCHS48.3X2.5	S 355	NC3	0.000	0.04	0.04	0.00
110YKB17	Yatay - CFCHS48.3X2.5	S 355	NC3	72.500	0.04	0.04	0.00
110YKB18	Yatay - CFCHS48.3X2.5	S 355	NC3	20.000	0.10	0.10	0.00
110YKB19	Yatay - CFCHS48.3X2.5	S 355	NC3	72.500	0.01	0.01	0.00
110YKB20	Yatay - CFCHS48.3X2.5	S 355	NC3	72.500	0.03	0.03	0.00
110YKB21	Yatay - CFCHS48.3X2.5	S 355	NC3	52.500	0.11	0.11	0.00
110YKB22	Yatay - CFCHS48.3X2.5	S 355	NC3	0.000	0.05	0.05	0.00
110YKB23	Yatay - CFCHS48.3X2.5	S 355	NC3	72.500	0.05	0.05	0.00
110YKB24	Yatay - CFCHS48.3X2.5	S 355	NC3	20.000	0.11	0.11	0.00
110YKB25	Yatay - CFCHS48.3X2.5	S 355	NC3	72.500	0.01	0.01	0.00
110YKB26	Yatay - CFCHS48.3X2.5	S 355	NC3	72.500	0.03	0.03	0.00
110YKB27	Yatay - CFCHS48.3X2.5	S 355	NC3	52.500	0.12	0.12	0.00
110YKB28	Yatay - CFCHS48.3X2.5	S 355	NC3	0.000	0.05	0.05	0.00
110YKB29	Yatay - CFCHS48.3X2.5	S 355	NC3	0.000	0.05	0.05	0.00
110YKB30	Yatay - CFCHS48.3X2.5	S 355	NC1	52.500	0.19	0.19	0.00
110YKB31	Yatay - CFCHS48.3X2.5	S 355	NC2	0.000	0.02	0.02	0.00
110YKB32	Yatay - CFCHS48.3X2.5	S 355	NC3	72.500	0.03	0.03	0.00
110YKB33	Yatay - CFCHS48.3X2.5	S 355	NC3	52.500	0.13	0.13	0.00
110YKB34	Yatay - CFCHS48.3X2.5	S 355	NC3	0.000	0.03	0.03	0.00
110YKB35	Yatay - CFCHS48.3X2.5	S 355	NC3	72.500	0.03	0.03	0.00
110YKB36	Yatay - CFCHS48.3X2.5	S 355	NC3	0.000	0.07	0.07	0.00

Member	css	mat	Case	dx [cm]	un.check [-]	sec.check [-]	stab.check [-]
110YKB37	Yatay - CFCHS48.3X2.5	S 355	NC3	72.500	0.00	0.00	0.00
110YKB38	Yatay - CFCHS48.3X2.5	S 355	NC3	72.500	0.03	0.03	0.00
110YKB39	Yatay - CFCHS48.3X2.5	S 355	NC3	52.500	0.09	0.09	0.00
110YKB40	Yatay - CFCHS48.3X2.5	S 355	NC3	0.000	0.03	0.03	0.00
110YKB41	Yatay - CFCHS48.3X2.5	S 355	NC3	0.000	0.03	0.03	0.00
110YKB42	Yatay - CFCHS48.3X2.5	S 355	NC3	20.000	0.09	0.09	0.00
110YKB43	Yatay - CFCHS48.3X2.5	S 355	NC3	72.500	0.01	0.01	0.00
110YKB44	Yatay - CFCHS48.3X2.5	S 355	NC3	72.500	0.03	0.03	0.00
110YKB45	Yatay - CFCHS48.3X2.5	S 355	NC3	52.500	0.08	0.08	0.00
110YKB46	Yatay - CFCHS48.3X2.5	S 355	NC3	0.000	0.03	0.03	0.00
110YKB47	Yatay - CFCHS48.3X2.5	S 355	NC3	0.000	0.03	0.03	0.00
110YKB48	Yatay - CFCHS48.3X2.5	S 355	NC3	20.000	0.09	0.09	0.00
110YKB49	Yatay - CFCHS48.3X2.5	S 355	NC3	72.500	0.01	0.01	0.00
110YKB50	Yatay - CFCHS48.3X2.5	S 355	NC3	72.500	0.03	0.03	0.00
110YKB51	Yatay - CFCHS48.3X2.5	S 355	NC3	52.500	0.09	0.09	0.00
110YKB52	Yatay - CFCHS48.3X2.5	S 355	NC3	0.000	0.03	0.03	0.00
110YKB53	Yatay - CFCHS48.3X2.5	S 355	NC3	0.000	0.03	0.03	0.00
110YKB54	Yatay - CFCHS48.3X2.5	S 355	NC3	20.000	0.10	0.10	0.00
110YKB55	Yatay - CFCHS48.3X2.5	S 355	NC3	72.500	0.01	0.01	0.00
110YKB56	Yatay - CFCHS48.3X2.5	S 355	NC3	72.500	0.03	0.03	0.00
110YKB57	Yatay - CFCHS48.3X2.5	S 355	NC3	52.500	0.09	0.09	0.00
110YKB58	Yatay - CFCHS48.3X2.5	S 355	NC3	0.000	0.03	0.03	0.00
110YKB59	Yatay - CFCHS48.3X2.5	S 355	NC3	0.000	0.03	0.03	0.00
110YKB60	Yatay - CFCHS48.3X2.5	S 355	NC3	20.000	0.10	0.10	0.00
110YKB61	Yatay - CFCHS48.3X2.5	S 355	NC3	72.500	0.01	0.01	0.00
110YKB62	Yatay - CFCHS48.3X2.5	S 355	NC3	72.500	0.04	0.04	0.00
110YKB63	Yatay - CFCHS48.3X2.5	S 355	NC1	52.500	0.10	0.10	0.00
110YKB64	Yatay - CFCHS48.3X2.5	S 355	NC3	0.000	0.04	0.04	0.00
110YKB65	Yatay - CFCHS48.3X2.5	S 355	NC3	0.000	0.03	0.03	0.00
110YKB66	Yatay - CFCHS48.3X2.5	S 355	NC1	52.500	0.18	0.18	0.00
110YKB67	Yatay - CFCHS48.3X2.5	S 355	NC3	72.500	0.01	0.01	0.00
110YKB68	Yatay - CFCHS48.3X2.5	S 355	NC3	72.500	0.04	0.04	0.00
110YKB69	Yatay - CFCHS48.3X2.5	S 355	NC3	52.500	0.12	0.12	0.00
110YKB70	Yatay - CFCHS48.3X2.5	S 355	NC3	0.000	0.03	0.03	0.00
110YKB71	Yatay - CFCHS48.3X2.5	S 355	NC3	0.000	0.02	0.02	0.00
110YKB72	Yatay - CFCHS48.3X2.5	S 355	NC3	72.500	0.14	0.14	0.00
110YKB73	Yatay - CFCHS48.3X2.5	S 355	NC3	72.500	0.15	0.15	0.00
110YKB74	Yatay - CFCHS48.3X2.5	S 355	NC3	72.500	0.15	0.15	0.00
110YKB75	Yatay - CFCHS48.3X2.5	S 355	NC3	72.500	0.15	0.15	0.00
110YKB76	Yatay - CFCHS48.3X2.5	S 355	NC3	72.500	0.15	0.15	0.00
110YKB77	Yatay - CFCHS48.3X2.5	S 355	NC3	72.500	0.15	0.15	0.00
110YKB78	Yatay - CFCHS48.3X2.5	S 355	NC3	72.500	0.15	0.15	0.00
110YKB79	Yatay - CFCHS48.3X2.5	S 355	NC3	72.500	0.15	0.15	0.00
110YKB80	Yatay - CFCHS48.3X2.5	S 355	NC3	72.500	0.14	0.14	0.00
110YKB81	Yatay - CFCHS48.3X2.5	S 355	NC4	72.500	0.07	0.07	0.00
110YKB82	Yatay - CFCHS48.3X2.5	S 355	NC3	20.000	0.08	0.08	0.00
110YKB83	Yatay - CFCHS48.3X2.5	S 355	NC3	20.000	0.07	0.07	0.00
110YKB84	Yatay - CFCHS48.3X2.5	S 355	NC3	20.000	0.05	0.05	0.00
110YKB85	Yatay - CFCHS48.3X2.5	S 355	NC3	20.000	0.05	0.05	0.00
110YKB86	Yatay - CFCHS48.3X2.5	S 355	NC4	72.500	0.08	0.08	0.00
110YKB87	Yatay - CFCHS48.3X2.5	S 355	NC3	20.000	0.07	0.07	0.00
110YKB88	Yatay - CFCHS48.3X2.5	S 355	NC3	20.000	0.08	0.08	0.00
110YKB89	Yatay - CFCHS48.3X2.5	S 355	NC3	20.000	0.06	0.06	0.00
110YKB90	Yatay - CFCHS48.3X2.5	S 355	NC4	52.500	0.06	0.06	0.00
110YKB91	Yatay - CFCHS48.3X2.5	S 355	NC1	0.000	0.06	0.06	0.00
110YKB92	Yatay - CFCHS48.3X2.5	S 355	NC1	0.000	0.06	0.06	0.00
110YKB93	Yatay - CFCHS48.3X2.5	S 355	NC3	52.500	0.05	0.05	0.00
110YKB94	Yatay - CFCHS48.3X2.5	S 355	NC3	52.500	0.05	0.05	0.00
110YKB95	Yatay - CFCHS48.3X2.5	S 355	NC4	52.500	0.06	0.06	0.00
110YKB96	Yatay - CFCHS48.3X2.5	S 355	NC1	0.000	0.06	0.06	0.00
110YKB97	Yatay - CFCHS48.3X2.5	S 355	NC1	0.000	0.06	0.06	0.00
110YKB98	Yatay - CFCHS48.3X2.5	S 355	NC3	52.500	0.06	0.06	0.00
110YKB99	Yatay - CFCHS48.3X2.5	S 355	NC3	52.500	0.05	0.05	0.00
110YKB100	Yatay - CFCHS48.3X2.5	S 355	NC2	0.000	0.06	0.06	0.00
110YKB101	Yatay - CFCHS48.3X2.5	S 355	NC3	52.500	0.05	0.05	0.00
110YKB102	Yatay - CFCHS48.3X2.5	S 355	NC3	52.500	0.05	0.05	0.00
110YKB103	Yatay - CFCHS48.3X2.5	S 355	NC3	52.500	0.05	0.05	0.00
110YKB104	Yatay - CFCHS48.3X2.5	S 355	NC3	0.000	0.05	0.05	0.00
110YKB105	Yatay - CFCHS48.3X2.5	S 355	NC4	52.500	0.05	0.05	0.00
110YKB106	Yatay - CFCHS48.3X2.5	S 355	NC3	52.500	0.06	0.06	0.00
110YKB107	Yatay - CFCHS48.3X2.5	S 355	NC3	52.500	0.06	0.06	0.00
110YKB108	Yatay - CFCHS48.3X2.5	S 355	NC2	52.500	0.06	0.06	0.00
110YKB109	Yatay - CFCHS48.3X2.5	S 355	NC2	52.500	0.06	0.06	0.00
110YKB110	Yatay - CFCHS48.3X2.5	S 355	NC2	52.500	0.06	0.06	0.00
110YKB111	Yatay - CFCHS48.3X2.5	S 355	NC2	52.500	0.06	0.06	0.00
110YKB112	Yatay - CFCHS48.3X2.5	S 355	NC2	52.500	0.06	0.06	0.00

Member	css	mat	Case	dx [cm]	un.check [-]	sec.check [-]	stab.check [-]
110YKB113	Yatay - CFCHS48.3X2.5	S 355	NC2	52.500	0.07	0.07	0.00
110YKB114	Yatay - CFCHS48.3X2.5	S 355	NC2	52.500	0.06	0.06	0.00
110YKB115	Yatay - CFCHS48.3X2.5	S 355	NC2	52.500	0.06	0.06	0.00
110YKB116	Yatay - CFCHS48.3X2.5	S 355	NC2	52.500	0.06	0.06	0.00
110YKB117	Yatay - CFCHS48.3X2.5	S 355	NC3	52.500	0.05	0.05	0.00
110YKB118	Yatay - CFCHS48.3X2.5	S 355	NC3	52.500	0.06	0.06	0.00
110YKB119	Yatay - CFCHS48.3X2.5	S 355	NC2	0.000	0.05	0.05	0.00
110YKB120	Yatay - CFCHS48.3X2.5	S 355	NC3	52.500	0.05	0.05	0.00
110YKB121	Yatay - CFCHS48.3X2.5	S 355	NC3	52.500	0.05	0.05	0.00
110YKB122	Yatay - CFCHS48.3X2.5	S 355	NC2	0.000	0.06	0.06	0.00
110YKB123	Yatay - CFCHS48.3X2.5	S 355	NC2	0.000	0.05	0.05	0.00
110YKB124	Yatay - CFCHS48.3X2.5	S 355	NC3	52.500	0.07	0.07	0.00
110YKB125	Yatay - CFCHS48.3X2.5	S 355	NC3	52.500	0.06	0.06	0.00
110YKB126	Yatay - CFCHS48.3X2.5	S 355	NC3	0.000	0.06	0.06	0.00
110YKB127	Yatay - CFCHS48.3X2.5	S 355	NC3	52.500	0.05	0.05	0.00
110YKB128	Yatay - CFCHS48.3X2.5	S 355	NC3	52.500	0.06	0.06	0.00
110YKB129	Yatay - CFCHS48.3X2.5	S 355	NC3	52.500	0.05	0.05	0.00
110YKB130	Yatay - CFCHS48.3X2.5	S 355	NC3	0.000	0.06	0.06	0.00
110YKB131	Yatay - CFCHS48.3X2.5	S 355	NC3	52.500	0.05	0.05	0.00
110YKB132	Yatay - CFCHS48.3X2.5	S 355	NC3	0.000	0.05	0.05	0.00
110YKB133	Yatay - CFCHS48.3X2.5	S 355	NC3	52.500	0.05	0.05	0.00
110YKB134	Yatay - CFCHS48.3X2.5	S 355	NC3	52.500	0.06	0.06	0.00
110YKB135	Yatay - CFCHS48.3X2.5	S 355	NC3	52.500	0.05	0.05	0.00
110YKB136	Yatay - CFCHS48.3X2.5	S 355	NC3	52.500	0.06	0.06	0.00
110YKB137	Yatay - CFCHS48.3X2.5	S 355	NC3	52.500	0.05	0.05	0.00
110YKB138	Yatay - CFCHS48.3X2.5	S 355	NC3	0.000	0.06	0.06	0.00
110YKB139	Yatay - CFCHS48.3X2.5	S 355	NC3	52.500	0.05	0.05	0.00
110YKB140	Yatay - CFCHS48.3X2.5	S 355	NC3	0.000	0.06	0.06	0.00
110YKB141	Yatay - CFCHS48.3X2.5	S 355	NC3	52.500	0.05	0.05	0.00
110YKB142	Yatay - CFCHS48.3X2.5	S 355	NC3	52.500	0.07	0.07	0.00
110YKB143	Yatay - CFCHS48.3X2.5	S 355	NC3	52.500	0.06	0.06	0.00
110YKB144	Yatay - CFCHS48.3X2.5	S 355	NC3	0.000	0.06	0.06	0.00
110YKB145	Yatay - CFCHS48.3X2.5	S 355	NC3	52.500	0.06	0.06	0.00
110YKB146	Yatay - CFCHS48.3X2.5	S 355	NC3	52.500	0.06	0.06	0.00
110YKB147	Yatay - CFCHS48.3X2.5	S 355	NC3	52.500	0.05	0.05	0.00
110YKB148	Yatay - CFCHS48.3X2.5	S 355	NC3	0.000	0.06	0.06	0.00
110YKB149	Yatay - CFCHS48.3X2.5	S 355	NC3	52.500	0.05	0.05	0.00
110YKB150	Yatay - CFCHS48.3X2.5	S 355	NC3	0.000	0.06	0.06	0.00
110YKB151	Yatay - CFCHS48.3X2.5	S 355	NC3	52.500	0.05	0.05	0.00
110YKB152	Yatay - CFCHS48.3X2.5	S 355	NC3	52.500	0.06	0.06	0.00
110YKB153	Yatay - CFCHS48.3X2.5	S 355	NC1	52.500	0.22	0.22	0.00
110YKB154	Yatay - CFCHS48.3X2.5	S 355	NC1	52.500	0.22	0.22	0.00
110YKB155	Yatay - CFCHS48.3X2.5	S 355	NC1	52.500	0.22	0.22	0.00
110YKB156	Yatay - CFCHS48.3X2.5	S 355	NC1	52.500	0.22	0.22	0.00
110YKB157	Yatay - CFCHS48.3X2.5	S 355	NC1	52.500	0.22	0.22	0.00
110YKB158	Yatay - CFCHS48.3X2.5	S 355	NC1	52.500	0.22	0.22	0.00
110YKB159	Yatay - CFCHS48.3X2.5	S 355	NC1	52.500	0.22	0.22	0.00
110YKB160	Yatay - CFCHS48.3X2.5	S 355	NC1	52.500	0.22	0.22	0.00
110YKB161	Yatay - CFCHS48.3X2.5	S 355	NC1	52.500	0.22	0.22	0.00
110YKB162	Yatay - CFCHS48.3X2.5	S 355	NC1	52.500	0.41	0.41	0.00
110YKB163	Yatay - CFCHS48.3X2.5	S 355	NC1	52.500	0.41	0.41	0.00
110YKB164	Yatay - CFCHS48.3X2.5	S 355	NC1	52.500	0.42	0.42	0.00
110YKB165	Yatay - CFCHS48.3X2.5	S 355	NC1	52.500	0.41	0.41	0.00
110YKB166	Yatay - CFCHS48.3X2.5	S 355	NC1	52.500	0.42	0.42	0.00
110YKB167	Yatay - CFCHS48.3X2.5	S 355	NC1	52.500	0.42	0.42	0.00
110YKB168	Yatay - CFCHS48.3X2.5	S 355	NC1	52.500	0.42	0.42	0.00
110YKB169	Yatay - CFCHS48.3X2.5	S 355	NC1	52.500	0.41	0.41	0.00
110YKB170	Yatay - CFCHS48.3X2.5	S 355	NC1	52.500	0.42	0.42	0.00
110YKB171	Yatay - CFCHS48.3X2.5	S 355	NC1	52.500	0.22	0.22	0.00
110YKB172	Yatay - CFCHS48.3X2.5	S 355	NC1	52.500	0.22	0.22	0.00
110YKB173	Yatay - CFCHS48.3X2.5	S 355	NC1	52.500	0.22	0.22	0.00
110YKB174	Yatay - CFCHS48.3X2.5	S 355	NC1	52.500	0.22	0.22	0.00
110YKB175	Yatay - CFCHS48.3X2.5	S 355	NC1	52.500	0.22	0.22	0.00
110YKB176	Yatay - CFCHS48.3X2.5	S 355	NC1	52.500	0.22	0.22	0.00
110YKB177	Yatay - CFCHS48.3X2.5	S 355	NC1	52.500	0.22	0.22	0.00
110YKB178	Yatay - CFCHS48.3X2.5	S 355	NC1	52.500	0.22	0.22	0.00
110YKB179	Yatay - CFCHS48.3X2.5	S 355	NC1	52.500	0.22	0.22	0.00
C.Platform	C.Platform - General cross-section	S 235	NC3	150.001	0.05	0.05	-1.00
C.Platform1	C.Platform - General cross-section	S 235	NC3	168.750	0.04	0.04	-1.00
C.Platform2	C.Platform - General cross-section	S 235	NC3	149.999	0.05	0.05	-1.00
C.Platform3	C.Platform - General cross-section	S 235	NC3	131.250	0.05	0.05	-1.00
C.Platform5	C.Platform - General cross-section	S 235	NC3	149.999	0.04	0.04	-1.00
C.Platform6	C.Platform - General cross-section	S 235	NC3	149.999	0.04	0.04	-1.00
C.Platform8	C.Platform - General cross-section	S 235	NC3	149.999	0.04	0.04	-1.00
C.Platform9	C.Platform - General cross-section	S 235	NC3	150.001	0.04	0.04	-1.00
C.Platform11	C.Platform - General cross-section	S 235	NC3	150.001	0.04	0.04	-1.00

Member	css	mat	Case	dx [cm]	un.check [-]	sec.check [-]	stab.check [-]
C.Platform12	C.Platform - General cross-section	S 235	NC3	149.999	0.04	0.04	-1.00
C.Platform14	C.Platform - General cross-section	S 235	NC3	149.999	0.04	0.04	-1.00
C.Platform15	C.Platform - General cross-section	S 235	NC3	149.999	0.04	0.04	-1.00
C.Platform17	C.Platform - General cross-section	S 235	NC3	150.001	0.04	0.04	-1.00
C.Platform18	C.Platform - General cross-section	S 235	NC3	149.999	0.04	0.04	-1.00
C.Platform20	C.Platform - General cross-section	S 235	NC3	150.001	0.04	0.04	-1.00
C.Platform21	C.Platform - General cross-section	S 235	NC3	150.001	0.04	0.04	-1.00
C.Platform23	C.Platform - General cross-section	S 235	NC3	150.001	0.05	0.05	-1.00
C.Platform24	C.Platform - General cross-section	S 235	NC3	168.750	0.05	0.05	-1.00
C.Platform26	C.Platform - General cross-section	S 235	NC3	149.999	0.05	0.05	-1.00
C.Platform27	C.Platform - General cross-section	S 235	NC3	131.250	0.04	0.04	-1.00
C.Platform29	C.Platform - General cross-section	S 235	NC3	206.250	0.08	0.08	-1.00
C.Platform31	C.Platform - General cross-section	S 235	NC3	243.750	0.09	0.09	-1.00
C.Platform32	C.Platform - General cross-section	S 235	NC3	300.000	0.09	0.09	-1.00
C.Platform33	C.Platform - General cross-section	S 235	NC3	0.000	0.09	0.09	-1.00
C.Platform35	C.Platform - General cross-section	S 235	NC3	0.000	0.08	0.08	-1.00
C.Platform36	C.Platform - General cross-section	S 235	NC3	0.000	0.07	0.07	-1.00
C.Platform38	C.Platform - General cross-section	S 235	NC3	300.000	0.07	0.07	-1.00
C.Platform39	C.Platform - General cross-section	S 235	NC3	262.500	0.06	0.06	-1.00
C.Platform41	C.Platform - General cross-section	S 235	NC3	0.000	0.07	0.07	-1.00
C.Platform42	C.Platform - General cross-section	S 235	NC3	281.250	0.07	0.07	-1.00
C.Platform44	C.Platform - General cross-section	S 235	NC3	300.000	0.07	0.07	-1.00
C.Platform45	C.Platform - General cross-section	S 235	NC3	18.750	0.07	0.07	-1.00
C.Platform47	C.Platform - General cross-section	S 235	NC3	0.000	0.07	0.07	-1.00
C.Platform48	C.Platform - General cross-section	S 235	NC3	37.500	0.06	0.06	-1.00
C.Platform50	C.Platform - General cross-section	S 235	NC3	300.000	0.08	0.08	-1.00
C.Platform51	C.Platform - General cross-section	S 235	NC3	300.000	0.07	0.07	-1.00
C.Platform53	C.Platform - General cross-section	S 235	NC3	0.000	0.09	0.09	-1.00
C.Platform54	C.Platform - General cross-section	S 235	NC3	300.000	0.08	0.08	-1.00
C.Platform56	C.Platform - General cross-section	S 235	NC3	93.750	0.08	0.08	-1.00
C.Platform57	C.Platform - General cross-section	S 235	NC3	56.250	0.08	0.08	-1.00
C.Platform59	C.Platform - General cross-section	S 235	NC3	300.000	0.08	0.08	-1.00
C.Platform61	C.Platform - General cross-section	S 235	NC3	225.000	0.07	0.07	-1.00
C.Platform62	C.Platform - General cross-section	S 235	NC3	0.000	0.08	0.08	-1.00
C.Platform63	C.Platform - General cross-section	S 235	NC3	0.000	0.07	0.07	-1.00
C.Platform65	C.Platform - General cross-section	S 235	NC3	300.000	0.06	0.06	-1.00
C.Platform66	C.Platform - General cross-section	S 235	NC3	243.750	0.05	0.05	-1.00
C.Platform68	C.Platform - General cross-section	S 235	NC3	0.000	0.06	0.06	-1.00
C.Platform69	C.Platform - General cross-section	S 235	NC3	243.750	0.05	0.05	-1.00
C.Platform71	C.Platform - General cross-section	S 235	NC3	300.000	0.07	0.07	-1.00
C.Platform72	C.Platform - General cross-section	S 235	NC3	300.000	0.06	0.06	-1.00
C.Platform74	C.Platform - General cross-section	S 235	NC3	0.000	0.07	0.07	-1.00
C.Platform75	C.Platform - General cross-section	S 235	NC3	300.000	0.06	0.06	-1.00
C.Platform77	C.Platform - General cross-section	S 235	NC3	300.000	0.06	0.06	-1.00
C.Platform78	C.Platform - General cross-section	S 235	NC3	0.000	0.06	0.06	-1.00
C.Platform80	C.Platform - General cross-section	S 235	NC3	0.000	0.06	0.06	-1.00
C.Platform81	C.Platform - General cross-section	S 235	NC3	56.250	0.05	0.05	-1.00
C.Platform83	C.Platform - General cross-section	S 235	NC3	300.000	0.08	0.08	-1.00
C.Platform84	C.Platform - General cross-section	S 235	NC3	300.000	0.06	0.06	-1.00
C.Platform86	C.Platform - General cross-section	S 235	NC3	0.000	0.08	0.08	-1.00
C.Platform87	C.Platform - General cross-section	S 235	NC3	75.000	0.07	0.07	-1.00
C.Platform89	C.Platform - General cross-section	S 235	NC3	206.250	0.08	0.08	-1.00
C.Platform91	C.Platform - General cross-section	S 235	NC3	243.750	0.08	0.08	-1.00
C.Platform92	C.Platform - General cross-section	S 235	NC3	300.000	0.08	0.08	-1.00
C.Platform93	C.Platform - General cross-section	S 235	NC3	0.000	0.08	0.08	-1.00
C.Platform95	C.Platform - General cross-section	S 235	NC3	0.000	0.08	0.08	-1.00
C.Platform96	C.Platform - General cross-section	S 235	NC3	0.000	0.07	0.07	-1.00
C.Platform98	C.Platform - General cross-section	S 235	NC3	300.000	0.06	0.06	-1.00
C.Platform99	C.Platform - General cross-section	S 235	NC3	262.500	0.06	0.06	-1.00
C.Platform101	C.Platform - General cross-section	S 235	NC3	0.000	0.07	0.07	-1.00
C.Platform102	C.Platform - General cross-section	S 235	NC3	262.500	0.06	0.06	-1.00
C.Platform104	C.Platform - General cross-section	S 235	NC3	300.000	0.07	0.07	-1.00
C.Platform105	C.Platform - General cross-section	S 235	NC3	37.500	0.06	0.06	-1.00
C.Platform107	C.Platform - General cross-section	S 235	NC3	0.000	0.07	0.07	-1.00
C.Platform108	C.Platform - General cross-section	S 235	NC3	37.500	0.06	0.06	-1.00
C.Platform110	C.Platform - General cross-section	S 235	NC3	300.000	0.08	0.08	-1.00
C.Platform111	C.Platform - General cross-section	S 235	NC3	262.500	0.07	0.07	-1.00
C.Platform113	C.Platform - General cross-section	S 235	NC3	0.000	0.08	0.08	-1.00
C.Platform114	C.Platform - General cross-section	S 235	NC3	300.000	0.08	0.08	-1.00
C.Platform116	C.Platform - General cross-section	S 235	NC3	112.500	0.08	0.08	-1.00
C.Platform117	C.Platform - General cross-section	S 235	NC3	56.250	0.08	0.08	-1.00
C.Platform119	C.Platform - General cross-section	S 235	NC3	300.000	0.09	0.09	-1.00
C.Platform121	C.Platform - General cross-section	S 235	NC3	225.000	0.07	0.07	-1.00
C.Platform122	C.Platform - General cross-section	S 235	NC3	0.000	0.09	0.09	-1.00
C.Platform123	C.Platform - General cross-section	S 235	NC3	0.000	0.07	0.07	-1.00
C.Platform125	C.Platform - General cross-section	S 235	NC3	300.000	0.06	0.06	-1.00

Member	css	mat	Case	dx [cm]	un.check [-]	sec.check [-]	stab.check [-]
C.Platform126	C.Platform - General cross-section	S 235	NC3	300.000	0.05	0.05	-1.00
C.Platform128	C.Platform - General cross-section	S 235	NC3	0.000	0.06	0.06	-1.00
C.Platform129	C.Platform - General cross-section	S 235	NC3	300.000	0.06	0.06	-1.00
C.Platform131	C.Platform - General cross-section	S 235	NC3	300.000	0.07	0.07	-1.00
C.Platform132	C.Platform - General cross-section	S 235	NC3	300.000	0.06	0.06	-1.00
C.Platform134	C.Platform - General cross-section	S 235	NC3	0.000	0.07	0.07	-1.00
C.Platform135	C.Platform - General cross-section	S 235	NC3	300.000	0.06	0.06	-1.00
C.Platform137	C.Platform - General cross-section	S 235	NC3	300.000	0.07	0.07	-1.00
C.Platform138	C.Platform - General cross-section	S 235	NC3	0.000	0.06	0.06	-1.00
C.Platform140	C.Platform - General cross-section	S 235	NC3	0.000	0.07	0.07	-1.00
C.Platform141	C.Platform - General cross-section	S 235	NC3	0.000	0.06	0.06	-1.00
C.Platform143	C.Platform - General cross-section	S 235	NC3	300.000	0.08	0.08	-1.00
C.Platform144	C.Platform - General cross-section	S 235	NC3	300.000	0.07	0.07	-1.00
C.Platform146	C.Platform - General cross-section	S 235	NC3	0.000	0.08	0.08	-1.00
C.Platform147	C.Platform - General cross-section	S 235	NC3	75.000	0.07	0.07	-1.00
C.Platform149	C.Platform - General cross-section	S 235	NC3	206.250	0.08	0.08	-1.00
C.Platform151	C.Platform - General cross-section	S 235	NC3	243.750	0.09	0.09	-1.00
C.Platform152	C.Platform - General cross-section	S 235	NC3	300.000	0.09	0.09	-1.00
C.Platform153	C.Platform - General cross-section	S 235	NC3	0.000	0.09	0.09	-1.00
C.Platform155	C.Platform - General cross-section	S 235	NC3	0.000	0.08	0.08	-1.00
C.Platform156	C.Platform - General cross-section	S 235	NC3	0.000	0.07	0.07	-1.00
C.Platform158	C.Platform - General cross-section	S 235	NC3	300.000	0.07	0.07	-1.00
C.Platform159	C.Platform - General cross-section	S 235	NC3	262.500	0.06	0.06	-1.00
C.Platform161	C.Platform - General cross-section	S 235	NC3	0.000	0.07	0.07	-1.00
C.Platform162	C.Platform - General cross-section	S 235	NC3	281.250	0.07	0.07	-1.00
C.Platform164	C.Platform - General cross-section	S 235	NC3	300.000	0.07	0.07	-1.00
C.Platform165	C.Platform - General cross-section	S 235	NC3	18.750	0.07	0.07	-1.00
C.Platform167	C.Platform - General cross-section	S 235	NC3	0.000	0.07	0.07	-1.00
C.Platform168	C.Platform - General cross-section	S 235	NC3	37.500	0.06	0.06	-1.00
C.Platform170	C.Platform - General cross-section	S 235	NC3	300.000	0.08	0.08	-1.00
C.Platform171	C.Platform - General cross-section	S 235	NC3	300.000	0.07	0.07	-1.00
C.Platform173	C.Platform - General cross-section	S 235	NC3	0.000	0.09	0.09	-1.00
C.Platform174	C.Platform - General cross-section	S 235	NC3	300.000	0.08	0.08	-1.00
C.Platform176	C.Platform - General cross-section	S 235	NC3	112.500	0.08	0.08	-1.00
C.Platform177	C.Platform - General cross-section	S 235	NC3	56.250	0.08	0.08	-1.00
C.Platform179	C.Platform - General cross-section	S 235	NC3	300.000	0.09	0.09	-1.00
C.Platform181	C.Platform - General cross-section	S 235	NC3	300.000	0.08	0.08	-1.00
C.Platform182	C.Platform - General cross-section	S 235	NC3	0.000	0.09	0.09	-1.00
C.Platform183	C.Platform - General cross-section	S 235	NC3	0.000	0.08	0.08	-1.00
C.Platform185	C.Platform - General cross-section	S 235	NC3	300.000	0.07	0.07	-1.00
C.Platform186	C.Platform - General cross-section	S 235	NC3	300.000	0.06	0.06	-1.00
C.Platform188	C.Platform - General cross-section	S 235	NC3	0.000	0.07	0.07	-1.00
C.Platform189	C.Platform - General cross-section	S 235	NC3	300.000	0.06	0.06	-1.00
C.Platform191	C.Platform - General cross-section	S 235	NC3	300.000	0.08	0.08	-1.00
C.Platform192	C.Platform - General cross-section	S 235	NC3	300.000	0.06	0.06	-1.00
C.Platform194	C.Platform - General cross-section	S 235	NC3	0.000	0.08	0.08	-1.00
C.Platform195	C.Platform - General cross-section	S 235	NC3	300.000	0.06	0.06	-1.00
C.Platform197	C.Platform - General cross-section	S 235	NC3	300.000	0.07	0.07	-1.00
C.Platform198	C.Platform - General cross-section	S 235	NC3	0.000	0.06	0.06	-1.00
C.Platform200	C.Platform - General cross-section	S 235	NC3	0.000	0.07	0.07	-1.00
C.Platform201	C.Platform - General cross-section	S 235	NC3	0.000	0.06	0.06	-1.00
C.Platform203	C.Platform - General cross-section	S 235	NC3	300.000	0.09	0.09	-1.00
C.Platform204	C.Platform - General cross-section	S 235	NC3	300.000	0.07	0.07	-1.00
C.Platform206	C.Platform - General cross-section	S 235	NC3	0.000	0.09	0.09	-1.00
C.Platform207	C.Platform - General cross-section	S 235	NC3	75.000	0.07	0.07	-1.00
C.Platform209	C.Platform - General cross-section	S 235	NC3	206.250	0.09	0.09	-1.00
C.Platform211	C.Platform - General cross-section	S 235	NC3	262.500	0.09	0.09	-1.00
C.Platform212	C.Platform - General cross-section	S 235	NC3	300.000	0.09	0.09	-1.00
C.Platform213	C.Platform - General cross-section	S 235	NC3	0.000	0.09	0.09	-1.00
C.Platform215	C.Platform - General cross-section	S 235	NC3	0.000	0.09	0.09	-1.00
C.Platform216	C.Platform - General cross-section	S 235	NC3	0.000	0.08	0.08	-1.00
C.Platform218	C.Platform - General cross-section	S 235	NC3	300.000	0.07	0.07	-1.00
C.Platform219	C.Platform - General cross-section	S 235	NC3	262.500	0.06	0.06	-1.00
C.Platform221	C.Platform - General cross-section	S 235	NC3	0.000	0.07	0.07	-1.00
C.Platform222	C.Platform - General cross-section	S 235	NC3	281.250	0.07	0.07	-1.00
C.Platform224	C.Platform - General cross-section	S 235	NC3	300.000	0.07	0.07	-1.00
C.Platform225	C.Platform - General cross-section	S 235	NC3	0.000	0.07	0.07	-1.00
C.Platform227	C.Platform - General cross-section	S 235	NC3	0.000	0.07	0.07	-1.00
C.Platform228	C.Platform - General cross-section	S 235	NC3	37.500	0.06	0.06	-1.00
C.Platform230	C.Platform - General cross-section	S 235	NC3	300.000	0.08	0.08	-1.00
C.Platform231	C.Platform - General cross-section	S 235	NC3	300.000	0.07	0.07	-1.00
C.Platform233	C.Platform - General cross-section	S 235	NC3	0.000	0.09	0.09	-1.00
C.Platform234	C.Platform - General cross-section	S 235	NC3	300.000	0.08	0.08	-1.00
C.Platform236	C.Platform - General cross-section	S 235	NC3	112.500	0.08	0.08	-1.00
C.Platform237	C.Platform - General cross-section	S 235	NC3	56.250	0.08	0.08	-1.00
C.Platform239	C.Platform - General cross-section	S 235	NC3	300.000	0.10	0.10	-1.00

Member	css	mat	Case	dx [cm]	un.check [-]	sec.check [-]	stab.check [-]
C.Platform241	C.Platform - General cross-section	S 235	NC3	300.000	0.08	0.08	-1.00
C.Platform242	C.Platform - General cross-section	S 235	NC3	0.000	0.10	0.10	-1.00
C.Platform243	C.Platform - General cross-section	S 235	NC3	0.000	0.08	0.08	-1.00
C.Platform245	C.Platform - General cross-section	S 235	NC3	300.000	0.07	0.07	-1.00
C.Platform246	C.Platform - General cross-section	S 235	NC3	300.000	0.06	0.06	-1.00
C.Platform248	C.Platform - General cross-section	S 235	NC3	0.000	0.07	0.07	-1.00
C.Platform249	C.Platform - General cross-section	S 235	NC3	300.000	0.06	0.06	-1.00
C.Platform251	C.Platform - General cross-section	S 235	NC3	300.000	0.08	0.08	-1.00
C.Platform252	C.Platform - General cross-section	S 235	NC3	300.000	0.07	0.07	-1.00
C.Platform254	C.Platform - General cross-section	S 235	NC3	0.000	0.08	0.08	-1.00
C.Platform255	C.Platform - General cross-section	S 235	NC3	300.000	0.07	0.07	-1.00
C.Platform257	C.Platform - General cross-section	S 235	NC3	300.000	0.08	0.08	-1.00
C.Platform258	C.Platform - General cross-section	S 235	NC3	0.000	0.07	0.07	-1.00
C.Platform260	C.Platform - General cross-section	S 235	NC3	0.000	0.07	0.07	-1.00
C.Platform261	C.Platform - General cross-section	S 235	NC3	0.000	0.06	0.06	-1.00
C.Platform263	C.Platform - General cross-section	S 235	NC3	300.000	0.09	0.09	-1.00
C.Platform264	C.Platform - General cross-section	S 235	NC3	300.000	0.08	0.08	-1.00
C.Platform266	C.Platform - General cross-section	S 235	NC3	0.000	0.09	0.09	-1.00
C.Platform267	C.Platform - General cross-section	S 235	NC3	0.000	0.08	0.08	-1.00
C.Platform269	C.Platform - General cross-section	S 235	NC1	150.001	0.26	0.26	-1.00
C.Platform271	C.Platform - General cross-section	S 235	NC1	150.001	0.26	0.26	-1.00
C.Platform272	C.Platform - General cross-section	S 235	NC1	149.999	0.25	0.25	-1.00
C.Platform273	C.Platform - General cross-section	S 235	NC1	149.999	0.25	0.25	-1.00
C.Platform275	C.Platform - General cross-section	S 235	NC1	149.999	0.25	0.25	-1.00
C.Platform276	C.Platform - General cross-section	S 235	NC1	149.999	0.25	0.25	-1.00
C.Platform278	C.Platform - General cross-section	S 235	NC1	149.999	0.25	0.25	-1.00
C.Platform279	C.Platform - General cross-section	S 235	NC1	150.001	0.25	0.25	-1.00
C.Platform281	C.Platform - General cross-section	S 235	NC1	150.001	0.25	0.25	-1.00
C.Platform282	C.Platform - General cross-section	S 235	NC1	150.001	0.25	0.25	-1.00
C.Platform284	C.Platform - General cross-section	S 235	NC1	149.999	0.25	0.25	-1.00
C.Platform285	C.Platform - General cross-section	S 235	NC1	149.999	0.25	0.25	-1.00
C.Platform287	C.Platform - General cross-section	S 235	NC1	150.001	0.25	0.25	-1.00
C.Platform288	C.Platform - General cross-section	S 235	NC1	149.999	0.25	0.25	-1.00
C.Platform290	C.Platform - General cross-section	S 235	NC1	150.001	0.25	0.25	-1.00
C.Platform291	C.Platform - General cross-section	S 235	NC1	150.001	0.25	0.25	-1.00
C.Platform293	C.Platform - General cross-section	S 235	NC1	150.001	0.25	0.25	-1.00
C.Platform294	C.Platform - General cross-section	S 235	NC1	150.001	0.25	0.25	-1.00
C.Platform296	C.Platform - General cross-section	S 235	NC1	149.999	0.26	0.26	-1.00
C.Platform297	C.Platform - General cross-section	S 235	NC1	149.999	0.26	0.26	-1.00
C.Platform299	C.Platform - General cross-section	S 235	NC1	150.001	0.47	0.47	-1.00
C.Platform301	C.Platform - General cross-section	S 235	NC1	150.001	0.47	0.47	-1.00
C.Platform302	C.Platform - General cross-section	S 235	NC1	149.999	0.47	0.47	-1.00
C.Platform303	C.Platform - General cross-section	S 235	NC1	149.999	0.47	0.47	-1.00
C.Platform305	C.Platform - General cross-section	S 235	NC1	149.999	0.47	0.47	-1.00
C.Platform306	C.Platform - General cross-section	S 235	NC1	149.999	0.47	0.47	-1.00
C.Platform308	C.Platform - General cross-section	S 235	NC1	150.001	0.47	0.47	-1.00
C.Platform309	C.Platform - General cross-section	S 235	NC1	150.001	0.47	0.47	-1.00
C.Platform311	C.Platform - General cross-section	S 235	NC1	149.999	0.47	0.47	-1.00
C.Platform312	C.Platform - General cross-section	S 235	NC1	150.001	0.47	0.47	-1.00
C.Platform314	C.Platform - General cross-section	S 235	NC1	150.001	0.47	0.47	-1.00
C.Platform315	C.Platform - General cross-section	S 235	NC1	150.001	0.47	0.47	-1.00
C.Platform317	C.Platform - General cross-section	S 235	NC1	149.999	0.47	0.47	-1.00
C.Platform318	C.Platform - General cross-section	S 235	NC1	149.999	0.47	0.47	-1.00
C.Platform320	C.Platform - General cross-section	S 235	NC1	150.001	0.47	0.47	-1.00
C.Platform321	C.Platform - General cross-section	S 235	NC1	149.999	0.47	0.47	-1.00
C.Platform323	C.Platform - General cross-section	S 235	NC1	150.001	0.47	0.47	-1.00
C.Platform324	C.Platform - General cross-section	S 235	NC1	150.001	0.47	0.47	-1.00
C.Platform326	C.Platform - General cross-section	S 235	NC1	149.999	0.47	0.47	-1.00
C.Platform327	C.Platform - General cross-section	S 235	NC1	149.999	0.47	0.47	-1.00
C.Platform329	C.Platform - General cross-section	S 235	NC1	150.001	0.26	0.26	-1.00
C.Platform331	C.Platform - General cross-section	S 235	NC1	150.001	0.26	0.26	-1.00
C.Platform332	C.Platform - General cross-section	S 235	NC1	149.999	0.25	0.25	-1.00
C.Platform333	C.Platform - General cross-section	S 235	NC1	149.999	0.25	0.25	-1.00
C.Platform335	C.Platform - General cross-section	S 235	NC1	149.999	0.25	0.25	-1.00
C.Platform336	C.Platform - General cross-section	S 235	NC1	149.999	0.25	0.25	-1.00
C.Platform338	C.Platform - General cross-section	S 235	NC1	149.999	0.25	0.25	-1.00
C.Platform339	C.Platform - General cross-section	S 235	NC1	150.001	0.25	0.25	-1.00
C.Platform341	C.Platform - General cross-section	S 235	NC1	150.001	0.25	0.25	-1.00
C.Platform342	C.Platform - General cross-section	S 235	NC1	150.001	0.25	0.25	-1.00
C.Platform344	C.Platform - General cross-section	S 235	NC1	149.999	0.25	0.25	-1.00
C.Platform345	C.Platform - General cross-section	S 235	NC1	149.999	0.25	0.25	-1.00
C.Platform347	C.Platform - General cross-section	S 235	NC1	150.001	0.25	0.25	-1.00
C.Platform348	C.Platform - General cross-section	S 235	NC1	149.999	0.25	0.25	-1.00
C.Platform350	C.Platform - General cross-section	S 235	NC1	150.001	0.25	0.25	-1.00
C.Platform351	C.Platform - General cross-section	S 235	NC1	150.001	0.25	0.25	-1.00
C.Platform353	C.Platform - General cross-section	S 235	NC1	150.001	0.25	0.25	-1.00

Member	css	mat	Case	dx [cm]	un.check [-]	sec.check [-]	stab.check [-]
C.Platform354	C.Platform - General cross-section	S 235	NC1	150.001	0.25	0.25	-1.00
C.Platform356	C.Platform - General cross-section	S 235	NC1	149.999	0.26	0.26	-1.00
C.Platform357	C.Platform - General cross-section	S 235	NC1	149.999	0.26	0.26	-1.00
Topukluk	Topukluk - General cross-section	S 235	NC3	0.000	0.23	0.23	-1.00
Topukluk1	Topukluk - General cross-section	S 235	NC3	300.000	0.22	0.22	-1.00
Topukluk2	Topukluk - General cross-section	S 235	NC3	0.000	0.19	0.19	-1.00
Topukluk3	Topukluk - General cross-section	S 235	NC3	300.000	0.19	0.19	-1.00
Topukluk4	Topukluk - General cross-section	S 235	NC3	0.000	0.19	0.19	-1.00
Topukluk5	Topukluk - General cross-section	S 235	NC3	0.000	0.19	0.19	-1.00
Topukluk6	Topukluk - General cross-section	S 235	NC3	300.000	0.19	0.19	-1.00
Topukluk7	Topukluk - General cross-section	S 235	NC3	300.000	0.19	0.19	-1.00
Topukluk8	Topukluk - General cross-section	S 235	NC3	0.000	0.19	0.19	-1.00
Topukluk9	Topukluk - General cross-section	S 235	NC3	300.000	0.19	0.19	-1.00
Topukluk110luk12	Topukluk - General cross-section	S 235	NC3	72.500	0.17	0.17	-1.00
Topukluk110luk13	Topukluk - General cross-section	S 235	NC3	72.500	0.17	0.17	-1.00
Topukluk110luk14	Topukluk - General cross-section	S 235	NC3	72.500	0.15	0.15	-1.00
Topukluk110luk15	Topukluk - General cross-section	S 235	NC3	72.500	0.18	0.18	-1.00
Topukluk110luk16	Topukluk - General cross-section	S 235	NC3	72.500	0.16	0.16	-1.00
Topukluk110luk17	Topukluk - General cross-section	S 235	NC3	72.500	0.19	0.19	-1.00
Topukluk110luk18	Topukluk - General cross-section	S 235	NC3	72.500	0.17	0.17	-1.00
Topukluk110luk19	Topukluk - General cross-section	S 235	NC3	72.500	0.20	0.20	-1.00
Topukluk110luk20	Topukluk - General cross-section	S 235	NC3	72.500	0.17	0.17	-1.00
Topukluk110luk21	Topukluk - General cross-section	S 235	NC3	72.500	0.21	0.21	-1.00
Topukluk110luk22	Topukluk - General cross-section	S 235	NC3	72.500	0.18	0.18	-1.00
Topukluk110luk23	Topukluk - General cross-section	S 235	NC3	72.500	0.23	0.23	-1.00
Topukluk10	Topukluk - General cross-section	S 235	NC3	0.000	0.22	0.22	-1.00
Topukluk11	Topukluk - General cross-section	S 235	NC3	300.000	0.21	0.21	-1.00
Topukluk12	Topukluk - General cross-section	S 235	NC3	300.000	0.20	0.20	-1.00
Topukluk13	Topukluk - General cross-section	S 235	NC3	0.000	0.20	0.20	-1.00
Topukluk14	Topukluk - General cross-section	S 235	NC3	300.000	0.20	0.20	-1.00
Topukluk15	Topukluk - General cross-section	S 235	NC3	0.000	0.20	0.20	-1.00
Topukluk16	Topukluk - General cross-section	S 235	NC3	300.000	0.22	0.22	-1.00
Topukluk17	Topukluk - General cross-section	S 235	NC3	0.000	0.21	0.21	-1.00
Topukluk18	Topukluk - General cross-section	S 235	NC3	300.000	0.21	0.21	-1.00
Topukluk19	Topukluk - General cross-section	S 235	NC3	300.000	0.19	0.19	-1.00
Topukluk20	Topukluk - General cross-section	S 235	NC3	0.000	0.27	0.27	-1.00
Topukluk21	Topukluk - General cross-section	S 235	NC3	300.000	0.25	0.25	-1.00
Topukluk22	Topukluk - General cross-section	S 235	NC3	0.000	0.21	0.21	-1.00
Topukluk23	Topukluk - General cross-section	S 235	NC3	300.000	0.21	0.21	-1.00
Topukluk24	Topukluk - General cross-section	S 235	NC3	0.000	0.22	0.22	-1.00
Topukluk25	Topukluk - General cross-section	S 235	NC3	300.000	0.21	0.21	-1.00
Topukluk26	Topukluk - General cross-section	S 235	NC3	0.000	0.21	0.21	-1.00
Topukluk27	Topukluk - General cross-section	S 235	NC3	300.000	0.21	0.21	-1.00
Topukluk28	Topukluk - General cross-section	S 235	NC3	0.000	0.23	0.23	-1.00
Topukluk29	Topukluk - General cross-section	S 235	NC3	300.000	0.23	0.23	-1.00
Topukluk30	Topukluk - General cross-section	S 235	NC3	0.000	0.23	0.23	-1.00
Topukluk31	Topukluk - General cross-section	S 235	NC3	300.000	0.22	0.22	-1.00
Topukluk32	Topukluk - General cross-section	S 235	NC3	300.000	0.21	0.21	-1.00
Topukluk33	Topukluk - General cross-section	S 235	NC3	0.000	0.22	0.22	-1.00
Topukluk34	Topukluk - General cross-section	S 235	NC3	300.000	0.22	0.22	-1.00
Topukluk35	Topukluk - General cross-section	S 235	NC3	0.000	0.21	0.21	-1.00
Topukluk36	Topukluk - General cross-section	S 235	NC3	300.000	0.23	0.23	-1.00
Topukluk37	Topukluk - General cross-section	S 235	NC3	0.000	0.22	0.22	-1.00
Topukluk38	Topukluk - General cross-section	S 235	NC3	300.000	0.22	0.22	-1.00
Topukluk39	Topukluk - General cross-section	S 235	NC3	300.000	0.20	0.20	-1.00
Topukluk40	Topukluk - General cross-section	S 235	NC3	0.000	0.28	0.28	-1.00
Topukluk41	Topukluk - General cross-section	S 235	NC3	300.000	0.27	0.27	-1.00
Topukluk42	Topukluk - General cross-section	S 235	NC3	0.000	0.23	0.23	-1.00
Topukluk43	Topukluk - General cross-section	S 235	NC3	300.000	0.23	0.23	-1.00
Topukluk44	Topukluk - General cross-section	S 235	NC3	0.000	0.23	0.23	-1.00
Topukluk45	Topukluk - General cross-section	S 235	NC3	300.000	0.22	0.22	-1.00
Topukluk46	Topukluk - General cross-section	S 235	NC3	0.000	0.22	0.22	-1.00
Topukluk47	Topukluk - General cross-section	S 235	NC3	300.000	0.22	0.22	-1.00
Topukluk48	Topukluk - General cross-section	S 235	NC3	0.000	0.24	0.24	-1.00
Topukluk49	Topukluk - General cross-section	S 235	NC3	300.000	0.25	0.25	-1.00
Topukluk50	Topukluk - General cross-section	S 235	NC3	0.000	0.25	0.25	-1.00
Topukluk51	Topukluk - General cross-section	S 235	NC3	300.000	0.24	0.24	-1.00
Topukluk52	Topukluk - General cross-section	S 235	NC3	300.000	0.23	0.23	-1.00
Topukluk53	Topukluk - General cross-section	S 235	NC3	0.000	0.23	0.23	-1.00
Topukluk54	Topukluk - General cross-section	S 235	NC3	300.000	0.23	0.23	-1.00
Topukluk55	Topukluk - General cross-section	S 235	NC3	0.000	0.23	0.23	-1.00
Topukluk56	Topukluk - General cross-section	S 235	NC3	300.000	0.24	0.24	-1.00
Topukluk57	Topukluk - General cross-section	S 235	NC3	0.000	0.23	0.23	-1.00
Topukluk58	Topukluk - General cross-section	S 235	NC3	300.000	0.23	0.23	-1.00
Topukluk59	Topukluk - General cross-section	S 235	NC3	300.000	0.21	0.21	-1.00
Topukluk60	Topukluk - General cross-section	S 235	NC3	0.000	0.30	0.30	-1.00

Member	css	mat	Case	dx [cm]	un.check [-]	sec.check [-]	stab.check [-]
Topukluk61	Topukluk - General cross-section	S 235	NC3	300.000	0.28	0.28	-1.00
Topukluk62	Topukluk - General cross-section	S 235	NC3	0.000	0.24	0.24	-1.00
Topukluk63	Topukluk - General cross-section	S 235	NC3	300.000	0.24	0.24	-1.00
Topukluk64	Topukluk - General cross-section	S 235	NC3	0.000	0.25	0.25	-1.00
Topukluk65	Topukluk - General cross-section	S 235	NC3	300.000	0.23	0.23	-1.00
Topukluk66	Topukluk - General cross-section	S 235	NC3	0.000	0.24	0.24	-1.00
Topukluk67	Topukluk - General cross-section	S 235	NC3	300.000	0.24	0.24	-1.00
Topukluk68	Topukluk - General cross-section	S 235	NC3	0.000	0.25	0.25	-1.00
Topukluk69	Topukluk - General cross-section	S 235	NC3	300.000	0.26	0.26	-1.00
Topukluk70	Topukluk - General cross-section	S 235	NC3	0.000	0.26	0.26	-1.00
Topukluk71	Topukluk - General cross-section	S 235	NC3	300.000	0.25	0.25	-1.00
Topukluk72	Topukluk - General cross-section	S 235	NC3	300.000	0.24	0.24	-1.00
Topukluk73	Topukluk - General cross-section	S 235	NC3	0.000	0.24	0.24	-1.00
Topukluk74	Topukluk - General cross-section	S 235	NC3	300.000	0.24	0.24	-1.00
Topukluk75	Topukluk - General cross-section	S 235	NC3	0.000	0.24	0.24	-1.00
Topukluk76	Topukluk - General cross-section	S 235	NC3	300.000	0.25	0.25	-1.00
Topukluk77	Topukluk - General cross-section	S 235	NC3	0.000	0.24	0.24	-1.00
Topukluk78	Topukluk - General cross-section	S 235	NC3	300.000	0.24	0.24	-1.00
Topukluk79	Topukluk - General cross-section	S 235	NC3	300.000	0.22	0.22	-1.00
Topukluk80	Topukluk - General cross-section	S 235	NC3	0.000	0.32	0.32	-1.00
Topukluk81	Topukluk - General cross-section	S 235	NC3	300.000	0.30	0.30	-1.00
Topukluk82	Topukluk - General cross-section	S 235	NC3	0.000	0.25	0.25	-1.00
Topukluk83	Topukluk - General cross-section	S 235	NC3	300.000	0.25	0.25	-1.00
Topukluk84	Topukluk - General cross-section	S 235	NC3	0.000	0.26	0.26	-1.00
Topukluk85	Topukluk - General cross-section	S 235	NC3	300.000	0.25	0.25	-1.00
Topukluk86	Topukluk - General cross-section	S 235	NC3	0.000	0.25	0.25	-1.00
Topukluk87	Topukluk - General cross-section	S 235	NC3	300.000	0.25	0.25	-1.00
Topukluk88	Topukluk - General cross-section	S 235	NC3	0.000	0.27	0.27	-1.00
Topukluk89	Topukluk - General cross-section	S 235	NC3	300.000	0.28	0.28	-1.00
Topukluk90	Topukluk - General cross-section	S 235	NC3	0.000	0.27	0.27	-1.00
Topukluk91	Topukluk - General cross-section	S 235	NC3	300.000	0.27	0.27	-1.00
Topukluk92	Topukluk - General cross-section	S 235	NC3	300.000	0.25	0.25	-1.00
Topukluk93	Topukluk - General cross-section	S 235	NC3	0.000	0.25	0.25	-1.00
Topukluk94	Topukluk - General cross-section	S 235	NC3	300.000	0.25	0.25	-1.00
Topukluk95	Topukluk - General cross-section	S 235	NC3	0.000	0.25	0.25	-1.00
Topukluk96	Topukluk - General cross-section	S 235	NC3	300.000	0.27	0.27	-1.00
Topukluk97	Topukluk - General cross-section	S 235	NC3	0.000	0.26	0.26	-1.00
Topukluk98	Topukluk - General cross-section	S 235	NC3	300.000	0.26	0.26	-1.00
Topukluk99	Topukluk - General cross-section	S 235	NC3	300.000	0.23	0.23	-1.00
Topukluk100	Topukluk - General cross-section	S 235	NC3	0.000	0.33	0.33	-1.00
Topukluk101	Topukluk - General cross-section	S 235	NC3	300.000	0.31	0.31	-1.00
Topukluk102	Topukluk - General cross-section	S 235	NC3	0.000	0.26	0.26	-1.00
Topukluk103	Topukluk - General cross-section	S 235	NC3	300.000	0.26	0.26	-1.00
Topukluk104	Topukluk - General cross-section	S 235	NC3	0.000	0.27	0.27	-1.00
Topukluk105	Topukluk - General cross-section	S 235	NC3	300.000	0.26	0.26	-1.00
Topukluk106	Topukluk - General cross-section	S 235	NC3	0.000	0.26	0.26	-1.00
Topukluk107	Topukluk - General cross-section	S 235	NC3	300.000	0.26	0.26	-1.00
Topukluk108	Topukluk - General cross-section	S 235	NC3	0.000	0.28	0.28	-1.00
Topukluk109	Topukluk - General cross-section	S 235	NC3	300.000	0.29	0.29	-1.00
Topukluk110	Topukluk - General cross-section	S 235	NC3	0.000	0.28	0.28	-1.00
Topukluk111	Topukluk - General cross-section	S 235	NC3	300.000	0.27	0.27	-1.00
Topukluk112	Topukluk - General cross-section	S 235	NC3	300.000	0.27	0.27	-1.00
Topukluk113	Topukluk - General cross-section	S 235	NC3	0.000	0.27	0.27	-1.00
Topukluk114	Topukluk - General cross-section	S 235	NC3	300.000	0.27	0.27	-1.00
Topukluk115	Topukluk - General cross-section	S 235	NC3	0.000	0.26	0.26	-1.00
Topukluk116	Topukluk - General cross-section	S 235	NC3	300.000	0.28	0.28	-1.00
Topukluk117	Topukluk - General cross-section	S 235	NC3	0.000	0.27	0.27	-1.00
Topukluk118	Topukluk - General cross-section	S 235	NC3	300.000	0.28	0.28	-1.00
Topukluk119	Topukluk - General cross-section	S 235	NC3	300.000	0.24	0.24	-1.00
300CKB	Çapraz - CFCHS48.3X2.5	S 355	NC3	170.789	0.08	0.08	0.00
300CKB1	Çapraz - CFCHS48.3X2.5	S 355	NC3	180.277	0.08	0.08	0.00
300CKB2	Çapraz - CFCHS48.3X2.5	S 355	NC3	180.277	0.08	0.08	0.00
300CKB3	Çapraz - CFCHS48.3X2.5	S 355	NC3	180.277	0.08	0.08	0.00
300CKB4	Çapraz - CFCHS48.3X2.5	S 355	NC3	180.277	0.08	0.08	0.00
300CKB5	Çapraz - CFCHS48.3X2.5	S 355	NC3	180.277	0.09	0.09	0.00
300CKB6	Çapraz - CFCHS48.3X2.5	S 355	NC3	180.277	0.08	0.08	0.00
300CKB7	Çapraz - CFCHS48.3X2.5	S 355	NC3	180.277	0.09	0.09	0.00
300CKB8	Çapraz - CFCHS48.3X2.5	S 355	NC3	180.277	0.09	0.09	0.00
300CKB9	Çapraz - CFCHS48.3X2.5	S 355	NC3	170.789	0.09	0.09	0.00
300CKB10	Çapraz - CFCHS48.3X2.5	S 355	NC3	170.789	0.09	0.09	0.00
300CKB11	Çapraz - CFCHS48.3X2.5	S 355	NC3	170.789	0.07	0.07	0.00
300CKB12	Çapraz - CFCHS48.3X2.5	S 355	NC3	180.277	0.06	0.06	0.00
300CKB13	Çapraz - CFCHS48.3X2.5	S 355	NC3	180.277	0.07	0.07	0.00
300CKB14	Çapraz - CFCHS48.3X2.5	S 355	NC3	180.277	0.07	0.07	0.00
300CKB15	Çapraz - CFCHS48.3X2.5	S 355	NC3	180.277	0.07	0.07	0.00
300CKB16	Çapraz - CFCHS48.3X2.5	S 355	NC3	180.277	0.07	0.07	0.00

Member	css	mat	Case	dx [cm]	un.check [-]	sec.check [-]	stab.check [-]
300CKB17	Çapraz - CFCHS48.3X2.5	S 355	NC3	180.277	0.08	0.08	0.00
300CKB18	Çapraz - CFCHS48.3X2.5	S 355	NC3	180.277	0.08	0.08	0.00
300CKB19	Çapraz - CFCHS48.3X2.5	S 355	NC3	180.277	0.08	0.08	0.00
300CKB20	Çapraz - CFCHS48.3X2.5	S 355	NC3	180.277	0.08	0.08	0.00
300CKB21	Çapraz - CFCHS48.3X2.5	S 355	NC3	180.277	0.08	0.08	0.00
110YKB180	Yatay - CFCHS48.3X2.5	S 355	NC3	0.000	0.08	0.08	0.00
110YKB181	Yatay - CFCHS48.3X2.5	S 355	NC3	0.000	0.08	0.08	0.00
110YKB182	Yatay - CFCHS48.3X2.5	S 355	NC3	0.000	0.08	0.08	0.00
110YKB183	Yatay - CFCHS48.3X2.5	S 355	NC3	0.000	0.08	0.08	0.00
110YKB184	Yatay - CFCHS48.3X2.5	S 355	NC3	0.000	0.08	0.08	0.00
110YKB185	Yatay - CFCHS48.3X2.5	S 355	NC3	0.000	0.08	0.08	0.00
110YKB186	Yatay - CFCHS48.3X2.5	S 355	NC3	0.000	0.08	0.08	0.00
110YKB187	Yatay - CFCHS48.3X2.5	S 355	NC3	0.000	0.08	0.08	0.00
110YKB188	Yatay - CFCHS48.3X2.5	S 355	NC3	0.000	0.08	0.08	0.00
110YKB190	Yatay - CFCHS48.3X2.5	S 355	NC3	0.000	0.01	0.01	0.00
110YKB191	Yatay - CFCHS48.3X2.5	S 355	NC4	72.500	0.02	0.02	0.00
300YKB360	Yatay - CFCHS48.3X2.5	S 355	NC3	149.999	0.05	0.05	0.00
300YKB361	Yatay - CFCHS48.3X2.5	S 355	NC3	149.999	0.04	0.04	0.00
300YKB362	Yatay - CFCHS48.3X2.5	S 355	NC3	149.999	0.05	0.05	0.00
300YKB363	Yatay - CFCHS48.3X2.5	S 355	NC3	149.999	0.05	0.05	0.00
300YKB364	Yatay - CFCHS48.3X2.5	S 355	NC3	149.999	0.05	0.05	0.00
300YKB365	Yatay - CFCHS48.3X2.5	S 355	NC3	149.999	0.05	0.05	0.00
300YKB366	Yatay - CFCHS48.3X2.5	S 355	NC3	149.999	0.05	0.05	0.00
300YKB367	Yatay - CFCHS48.3X2.5	S 355	NC3	149.999	0.05	0.05	0.00
300YKB368	Yatay - CFCHS48.3X2.5	S 355	NC3	149.999	0.05	0.05	0.00
300YKB369	Yatay - CFCHS48.3X2.5	S 355	NC3	150.001	0.05	0.05	0.00
300YKB370	Yatay - CFCHS48.3X2.5	S 355	NC4	300.000	0.04	0.04	0.00
300YKB371	Yatay - CFCHS48.3X2.5	S 355	NC4	300.000	0.04	0.04	0.00
300YKB372	Yatay - CFCHS48.3X2.5	S 355	NC4	300.000	0.04	0.04	0.00
300YKB373	Yatay - CFCHS48.3X2.5	S 355	NC4	300.000	0.04	0.04	0.00
300YKB374	Yatay - CFCHS48.3X2.5	S 355	NC4	300.000	0.04	0.04	0.00
300YKB375	Yatay - CFCHS48.3X2.5	S 355	NC4	300.000	0.04	0.04	0.00
300YKB376	Yatay - CFCHS48.3X2.5	S 355	NC4	300.000	0.04	0.04	0.00
300YKB377	Yatay - CFCHS48.3X2.5	S 355	NC4	300.000	0.04	0.04	0.00
300YKB378	Yatay - CFCHS48.3X2.5	S 355	NC4	300.000	0.04	0.04	0.00
300YKB379	Yatay - CFCHS48.3X2.5	S 355	NC4	300.000	0.04	0.04	0.00
300YKB380	Yatay - CFCHS48.3X2.5	S 355	NC3	149.999	0.05	0.05	0.00
300YKB381	Yatay - CFCHS48.3X2.5	S 355	NC4	300.000	0.02	0.02	0.00
300YKB382	Yatay - CFCHS48.3X2.5	S 355	NC3	150.001	0.05	0.05	0.00
300YKB383	Yatay - CFCHS48.3X2.5	S 355	NC4	300.000	0.02	0.02	0.00
300YKB384	Yatay - CFCHS48.3X2.5	S 355	NC3	150.001	0.05	0.05	0.00
300YKB385	Yatay - CFCHS48.3X2.5	S 355	NC4	300.000	0.02	0.02	0.00
300YKB386	Yatay - CFCHS48.3X2.5	S 355	NC3	149.999	0.05	0.05	0.00
300YKB387	Yatay - CFCHS48.3X2.5	S 355	NC4	300.000	0.02	0.02	0.00
300YKB388	Yatay - CFCHS48.3X2.5	S 355	NC3	149.999	0.05	0.05	0.00
300YKB389	Yatay - CFCHS48.3X2.5	S 355	NC4	300.000	0.02	0.02	0.00
300YKB390	Yatay - CFCHS48.3X2.5	S 355	NC3	149.999	0.05	0.05	0.00
300YKB391	Yatay - CFCHS48.3X2.5	S 355	NC4	300.000	0.02	0.02	0.00
300YKB392	Yatay - CFCHS48.3X2.5	S 355	NC3	150.001	0.05	0.05	0.00
300YKB393	Yatay - CFCHS48.3X2.5	S 355	NC4	300.000	0.02	0.02	0.00
300YKB394	Yatay - CFCHS48.3X2.5	S 355	NC3	149.999	0.05	0.05	0.00
300YKB395	Yatay - CFCHS48.3X2.5	S 355	NC4	300.000	0.02	0.02	0.00
300YKB396	Yatay - CFCHS48.3X2.5	S 355	NC3	150.001	0.05	0.05	0.00
300YKB397	Yatay - CFCHS48.3X2.5	S 355	NC4	300.000	0.02	0.02	0.00
300YKB398	Yatay - CFCHS48.3X2.5	S 355	NC3	150.001	0.05	0.05	0.00
300YKB399	Yatay - CFCHS48.3X2.5	S 355	NC3	300.000	0.02	0.02	0.00
300YKB400	Yatay - CFCHS48.3X2.5	S 355	NC3	149.999	0.05	0.05	0.00
300YKB401	Yatay - CFCHS48.3X2.5	S 355	NC4	300.000	0.02	0.02	0.00
300YKB402	Yatay - CFCHS48.3X2.5	S 355	NC3	150.001	0.05	0.05	0.00
300YKB403	Yatay - CFCHS48.3X2.5	S 355	NC4	300.000	0.02	0.02	0.00
300YKB404	Yatay - CFCHS48.3X2.5	S 355	NC3	149.999	0.05	0.05	0.00
300YKB405	Yatay - CFCHS48.3X2.5	S 355	NC4	300.000	0.02	0.02	0.00
300YKB406	Yatay - CFCHS48.3X2.5	S 355	NC3	150.001	0.05	0.05	0.00
300YKB407	Yatay - CFCHS48.3X2.5	S 355	NC4	300.000	0.02	0.02	0.00
300YKB408	Yatay - CFCHS48.3X2.5	S 355	NC3	149.999	0.05	0.05	0.00
300YKB409	Yatay - CFCHS48.3X2.5	S 355	NC4	300.000	0.02	0.02	0.00
300YKB410	Yatay - CFCHS48.3X2.5	S 355	NC3	150.001	0.05	0.05	0.00
300YKB411	Yatay - CFCHS48.3X2.5	S 355	NC4	300.000	0.02	0.02	0.00
300YKB412	Yatay - CFCHS48.3X2.5	S 355	NC3	149.999	0.05	0.05	0.00
300YKB413	Yatay - CFCHS48.3X2.5	S 355	NC4	300.000	0.02	0.02	0.00
300YKB414	Yatay - CFCHS48.3X2.5	S 355	NC3	150.001	0.05	0.05	0.00
300YKB415	Yatay - CFCHS48.3X2.5	S 355	NC4	300.000	0.02	0.02	0.00
300YKB416	Yatay - CFCHS48.3X2.5	S 355	NC3	149.999	0.05	0.05	0.00
300YKB417	Yatay - CFCHS48.3X2.5	S 355	NC4	300.000	0.02	0.02	0.00
300YKB418	Yatay - CFCHS48.3X2.5	S 355	NC3	150.001	0.05	0.05	0.00
300YKB419	Yatay - CFCHS48.3X2.5	S 355	NC4	300.000	0.02	0.02	0.00

Member	css	mat	Case	dx [cm]	un.check [-]	sec.check [-]	stab.check [-]
300YKB420	Yatay - CFCHS48.3X2.5	S 355	NC3	149.999	0.05	0.05	0.00
300YKB421	Yatay - CFCHS48.3X2.5	S 355	NC4	300.000	0.02	0.02	0.00
300YKB422	Yatay - CFCHS48.3X2.5	S 355	NC3	150.001	0.05	0.05	0.00
300YKB423	Yatay - CFCHS48.3X2.5	S 355	NC4	300.000	0.02	0.02	0.00
300YKB424	Yatay - CFCHS48.3X2.5	S 355	NC3	150.001	0.05	0.05	0.00
300YKB425	Yatay - CFCHS48.3X2.5	S 355	NC4	300.000	0.02	0.02	0.00
300YKB426	Yatay - CFCHS48.3X2.5	S 355	NC3	149.999	0.05	0.05	0.00
300YKB427	Yatay - CFCHS48.3X2.5	S 355	NC4	300.000	0.02	0.02	0.00
300YKB428	Yatay - CFCHS48.3X2.5	S 355	NC3	149.999	0.05	0.05	0.00
300YKB429	Yatay - CFCHS48.3X2.5	S 355	NC4	300.000	0.02	0.02	0.00
300YKB430	Yatay - CFCHS48.3X2.5	S 355	NC3	149.999	0.05	0.05	0.00
300YKB431	Yatay - CFCHS48.3X2.5	S 355	NC4	300.000	0.02	0.02	0.00
300YKB432	Yatay - CFCHS48.3X2.5	S 355	NC3	150.001	0.05	0.05	0.00
300YKB433	Yatay - CFCHS48.3X2.5	S 355	NC4	300.000	0.02	0.02	0.00
300YKB434	Yatay - CFCHS48.3X2.5	S 355	NC3	149.999	0.05	0.05	0.00
300YKB435	Yatay - CFCHS48.3X2.5	S 355	NC4	300.000	0.02	0.02	0.00
300YKB436	Yatay - CFCHS48.3X2.5	S 355	NC3	150.001	0.05	0.05	0.00
300YKB437	Yatay - CFCHS48.3X2.5	S 355	NC4	300.000	0.02	0.02	0.00
300YKB438	Yatay - CFCHS48.3X2.5	S 355	NC3	150.001	0.05	0.05	0.00
300YKB439	Yatay - CFCHS48.3X2.5	S 355	NC4	300.000	0.02	0.02	0.00
300YKB440	Yatay - CFCHS48.3X2.5	S 355	NC3	149.999	0.05	0.05	0.00
300YKB441	Yatay - CFCHS48.3X2.5	S 355	NC4	300.000	0.02	0.02	0.00
300YKB442	Yatay - CFCHS48.3X2.5	S 355	NC3	150.001	0.05	0.05	0.00
300YKB443	Yatay - CFCHS48.3X2.5	S 355	NC4	300.000	0.02	0.02	0.00
300YKB444	Yatay - CFCHS48.3X2.5	S 355	NC3	149.999	0.05	0.05	0.00
300YKB445	Yatay - CFCHS48.3X2.5	S 355	NC4	300.000	0.02	0.02	0.00
300YKB446	Yatay - CFCHS48.3X2.5	S 355	NC3	150.001	0.05	0.05	0.00
300YKB447	Yatay - CFCHS48.3X2.5	S 355	NC4	300.000	0.02	0.02	0.00
300YKB448	Yatay - CFCHS48.3X2.5	S 355	NC3	149.999	0.05	0.05	0.00
300YKB449	Yatay - CFCHS48.3X2.5	S 355	NC4	300.000	0.02	0.02	0.00
300YKB450	Yatay - CFCHS48.3X2.5	S 355	NC3	150.001	0.05	0.05	0.00
300YKB451	Yatay - CFCHS48.3X2.5	S 355	NC4	300.000	0.02	0.02	0.00
300YKB452	Yatay - CFCHS48.3X2.5	S 355	NC3	149.999	0.05	0.05	0.00
300YKB453	Yatay - CFCHS48.3X2.5	S 355	NC4	300.000	0.02	0.02	0.00
300YKB454	Yatay - CFCHS48.3X2.5	S 355	NC3	150.001	0.05	0.05	0.00
300YKB455	Yatay - CFCHS48.3X2.5	S 355	NC4	300.000	0.02	0.02	0.00
300YKB456	Yatay - CFCHS48.3X2.5	S 355	NC3	149.999	0.05	0.05	0.00
300YKB457	Yatay - CFCHS48.3X2.5	S 355	NC4	300.000	0.02	0.02	0.00
300YKB458	Yatay - CFCHS48.3X2.5	S 355	NC3	150.001	0.05	0.05	0.00
300YKB459	Yatay - CFCHS48.3X2.5	S 355	NC4	300.000	0.02	0.02	0.00
300YKB460	Yatay - CFCHS48.3X2.5	S 355	NC3	149.999	0.06	0.06	0.00
300YKB461	Yatay - CFCHS48.3X2.5	S 355	NC4	300.000	0.02	0.02	0.00
300YKB462	Yatay - CFCHS48.3X2.5	S 355	NC3	150.001	0.05	0.05	0.00
300YKB463	Yatay - CFCHS48.3X2.5	S 355	NC4	300.000	0.02	0.02	0.00
300YKB464	Yatay - CFCHS48.3X2.5	S 355	NC3	150.001	0.05	0.05	0.00
300YKB465	Yatay - CFCHS48.3X2.5	S 355	NC4	300.000	0.02	0.02	0.00
300YKB466	Yatay - CFCHS48.3X2.5	S 355	NC3	149.999	0.05	0.05	0.00
300YKB467	Yatay - CFCHS48.3X2.5	S 355	NC4	300.000	0.02	0.02	0.00
300YKB468	Yatay - CFCHS48.3X2.5	S 355	NC3	149.999	0.05	0.05	0.00
300YKB469	Yatay - CFCHS48.3X2.5	S 355	NC4	300.000	0.02	0.02	0.00
300YKB470	Yatay - CFCHS48.3X2.5	S 355	NC3	149.999	0.05	0.05	0.00
300YKB471	Yatay - CFCHS48.3X2.5	S 355	NC4	300.000	0.02	0.02	0.00
300YKB472	Yatay - CFCHS48.3X2.5	S 355	NC3	150.001	0.05	0.05	0.00
300YKB473	Yatay - CFCHS48.3X2.5	S 355	NC4	300.000	0.02	0.02	0.00
300YKB474	Yatay - CFCHS48.3X2.5	S 355	NC3	149.999	0.05	0.05	0.00
300YKB475	Yatay - CFCHS48.3X2.5	S 355	NC4	300.000	0.02	0.02	0.00
300YKB476	Yatay - CFCHS48.3X2.5	S 355	NC3	150.001	0.05	0.05	0.00
300YKB477	Yatay - CFCHS48.3X2.5	S 355	NC4	300.000	0.02	0.02	0.00
300YKB478	Yatay - CFCHS48.3X2.5	S 355	NC3	149.999	0.06	0.06	0.00
300YKB479	Yatay - CFCHS48.3X2.5	S 355	NC4	300.000	0.02	0.02	0.00
300YKB480	Yatay - CFCHS48.3X2.5	S 355	NC3	149.999	0.06	0.06	0.00
300YKB481	Yatay - CFCHS48.3X2.5	S 355	NC4	300.000	0.02	0.02	0.00
300YKB482	Yatay - CFCHS48.3X2.5	S 355	NC3	150.001	0.05	0.05	0.00
300YKB483	Yatay - CFCHS48.3X2.5	S 355	NC4	300.000	0.02	0.02	0.00
300YKB484	Yatay - CFCHS48.3X2.5	S 355	NC3	149.999	0.05	0.05	0.00
300YKB485	Yatay - CFCHS48.3X2.5	S 355	NC4	300.000	0.02	0.02	0.00
300YKB486	Yatay - CFCHS48.3X2.5	S 355	NC3	150.001	0.05	0.05	0.00
300YKB487	Yatay - CFCHS48.3X2.5	S 355	NC4	300.000	0.02	0.02	0.00
300YKB488	Yatay - CFCHS48.3X2.5	S 355	NC3	149.999	0.05	0.05	0.00
300YKB489	Yatay - CFCHS48.3X2.5	S 355	NC4	300.000	0.02	0.02	0.00
300YKB490	Yatay - CFCHS48.3X2.5	S 355	NC3	150.001	0.05	0.05	0.00
300YKB491	Yatay - CFCHS48.3X2.5	S 355	NC4	300.000	0.02	0.02	0.00
300YKB492	Yatay - CFCHS48.3X2.5	S 355	NC3	149.999	0.05	0.05	0.00
300YKB493	Yatay - CFCHS48.3X2.5	S 355	NC4	300.000	0.02	0.02	0.00
300YKB494	Yatay - CFCHS48.3X2.5	S 355	NC3	150.001	0.05	0.05	0.00
300YKB495	Yatay - CFCHS48.3X2.5	S 355	NC4	300.000	0.02	0.02	0.00

Member	css	mat	Case	dx [cm]	un.check [-]	sec.check [-]	stab.check [-]
300YKB496	Yatay - CFCHS48.3X2.5	S 355	NC3	149.999	0.05	0.05	0.00
300YKB497	Yatay - CFCHS48.3X2.5	S 355	NC4	300.000	0.02	0.02	0.00
300YKB498	Yatay - CFCHS48.3X2.5	S 355	NC3	150.001	0.05	0.05	0.00
300YKB499	Yatay - CFCHS48.3X2.5	S 355	NC4	300.000	0.02	0.02	0.00
300YKB500	Yatay - CFCHS48.3X2.5	S 355	NC3	149.999	0.06	0.06	0.00
300YKB501	Yatay - CFCHS48.3X2.5	S 355	NC4	300.000	0.02	0.02	0.00
300YKB502	Yatay - CFCHS48.3X2.5	S 355	NC3	150.001	0.05	0.05	0.00
300YKB503	Yatay - CFCHS48.3X2.5	S 355	NC4	300.000	0.02	0.02	0.00
300YKB504	Yatay - CFCHS48.3X2.5	S 355	NC3	149.999	0.05	0.05	0.00
300YKB505	Yatay - CFCHS48.3X2.5	S 355	NC4	300.000	0.02	0.02	0.00
300YKB506	Yatay - CFCHS48.3X2.5	S 355	NC3	149.999	0.06	0.06	0.00
300YKB507	Yatay - CFCHS48.3X2.5	S 355	NC4	300.000	0.02	0.02	0.00
300YKB508	Yatay - CFCHS48.3X2.5	S 355	NC3	149.999	0.06	0.06	0.00
300YKB509	Yatay - CFCHS48.3X2.5	S 355	NC4	300.000	0.02	0.02	0.00
300YKB510	Yatay - CFCHS48.3X2.5	S 355	NC3	149.999	0.06	0.06	0.00
300YKB511	Yatay - CFCHS48.3X2.5	S 355	NC4	300.000	0.02	0.02	0.00
300YKB512	Yatay - CFCHS48.3X2.5	S 355	NC3	150.001	0.06	0.06	0.00
300YKB513	Yatay - CFCHS48.3X2.5	S 355	NC4	300.000	0.02	0.02	0.00
300YKB514	Yatay - CFCHS48.3X2.5	S 355	NC3	149.999	0.06	0.06	0.00
300YKB515	Yatay - CFCHS48.3X2.5	S 355	NC4	300.000	0.02	0.02	0.00
300YKB516	Yatay - CFCHS48.3X2.5	S 355	NC3	150.001	0.06	0.06	0.00
300YKB517	Yatay - CFCHS48.3X2.5	S 355	NC4	300.000	0.02	0.02	0.00
300YKB518	Yatay - CFCHS48.3X2.5	S 355	NC3	149.999	0.06	0.06	0.00
300YKB519	Yatay - CFCHS48.3X2.5	S 355	NC4	300.000	0.02	0.02	0.00
300YKB520	Yatay - CFCHS48.3X2.5	S 355	NC3	149.999	0.06	0.06	0.00
300YKB521	Yatay - CFCHS48.3X2.5	S 355	NC4	300.000	0.02	0.02	0.00
300YKB522	Yatay - CFCHS48.3X2.5	S 355	NC3	150.001	0.05	0.05	0.00
300YKB523	Yatay - CFCHS48.3X2.5	S 355	NC4	300.000	0.02	0.02	0.00
300YKB524	Yatay - CFCHS48.3X2.5	S 355	NC3	149.999	0.06	0.06	0.00
300YKB525	Yatay - CFCHS48.3X2.5	S 355	NC4	300.000	0.02	0.02	0.00
300YKB526	Yatay - CFCHS48.3X2.5	S 355	NC3	149.999	0.06	0.06	0.00
300YKB527	Yatay - CFCHS48.3X2.5	S 355	NC4	300.000	0.02	0.02	0.00
300YKB528	Yatay - CFCHS48.3X2.5	S 355	NC3	149.999	0.06	0.06	0.00
300YKB529	Yatay - CFCHS48.3X2.5	S 355	NC4	300.000	0.02	0.02	0.00
300YKB530	Yatay - CFCHS48.3X2.5	S 355	NC3	150.001	0.06	0.06	0.00
300YKB531	Yatay - CFCHS48.3X2.5	S 355	NC4	300.000	0.02	0.02	0.00
300YKB532	Yatay - CFCHS48.3X2.5	S 355	NC3	149.999	0.05	0.05	0.00
300YKB533	Yatay - CFCHS48.3X2.5	S 355	NC4	300.000	0.02	0.02	0.00
300YKB534	Yatay - CFCHS48.3X2.5	S 355	NC3	149.999	0.06	0.06	0.00
300YKB535	Yatay - CFCHS48.3X2.5	S 355	NC4	300.000	0.02	0.02	0.00
300YKB536	Yatay - CFCHS48.3X2.5	S 355	NC3	149.999	0.05	0.05	0.00
300YKB537	Yatay - CFCHS48.3X2.5	S 355	NC4	300.000	0.02	0.02	0.00
300YKB538	Yatay - CFCHS48.3X2.5	S 355	NC3	150.001	0.06	0.06	0.00
300YKB539	Yatay - CFCHS48.3X2.5	S 355	NC4	300.000	0.02	0.02	0.00
300YKB540	Yatay - CFCHS48.3X2.5	S 355	NC3	149.999	0.06	0.06	0.00
300YKB541	Yatay - CFCHS48.3X2.5	S 355	NC4	300.000	0.02	0.02	0.00
300YKB542	Yatay - CFCHS48.3X2.5	S 355	NC3	150.001	0.06	0.06	0.00
300YKB543	Yatay - CFCHS48.3X2.5	S 355	NC4	300.000	0.02	0.02	0.00
300YKB544	Yatay - CFCHS48.3X2.5	S 355	NC3	149.999	0.06	0.06	0.00
300YKB545	Yatay - CFCHS48.3X2.5	S 355	NC4	300.000	0.02	0.02	0.00
300YKB546	Yatay - CFCHS48.3X2.5	S 355	NC3	149.999	0.06	0.06	0.00
300YKB547	Yatay - CFCHS48.3X2.5	S 355	NC4	300.000	0.02	0.02	0.00
300YKB548	Yatay - CFCHS48.3X2.5	S 355	NC3	149.999	0.06	0.06	0.00
300YKB549	Yatay - CFCHS48.3X2.5	S 355	NC4	300.000	0.02	0.02	0.00
300YKB550	Yatay - CFCHS48.3X2.5	S 355	NC3	149.999	0.06	0.06	0.00
300YKB551	Yatay - CFCHS48.3X2.5	S 355	NC4	300.000	0.02	0.02	0.00
300YKB552	Yatay - CFCHS48.3X2.5	S 355	NC3	150.001	0.06	0.06	0.00
300YKB553	Yatay - CFCHS48.3X2.5	S 355	NC4	300.000	0.02	0.02	0.00
300YKB554	Yatay - CFCHS48.3X2.5	S 355	NC3	149.999	0.06	0.06	0.00
300YKB555	Yatay - CFCHS48.3X2.5	S 355	NC4	300.000	0.02	0.02	0.00
300YKB556	Yatay - CFCHS48.3X2.5	S 355	NC3	150.001	0.06	0.06	0.00
300YKB557	Yatay - CFCHS48.3X2.5	S 355	NC4	300.000	0.02	0.02	0.00
300YKB558	Yatay - CFCHS48.3X2.5	S 355	NC3	150.001	0.06	0.06	0.00
300YKB559	Yatay - CFCHS48.3X2.5	S 355	NC4	300.000	0.02	0.02	0.00
300YKB560	Yatay - CFCHS48.3X2.5	S 355	NC3	149.999	0.06	0.06	0.00
300YKB561	Yatay - CFCHS48.3X2.5	S 355	NC4	300.000	0.02	0.02	0.00
300YKB562	Yatay - CFCHS48.3X2.5	S 355	NC3	150.001	0.06	0.06	0.00
300YKB563	Yatay - CFCHS48.3X2.5	S 355	NC4	300.000	0.02	0.02	0.00
300YKB564	Yatay - CFCHS48.3X2.5	S 355	NC3	149.999	0.06	0.06	0.00
300YKB565	Yatay - CFCHS48.3X2.5	S 355	NC4	300.000	0.02	0.02	0.00
300YKB566	Yatay - CFCHS48.3X2.5	S 355	NC3	150.001	0.06	0.06	0.00
300YKB567	Yatay - CFCHS48.3X2.5	S 355	NC4	300.000	0.02	0.02	0.00
300YKB568	Yatay - CFCHS48.3X2.5	S 355	NC3	149.999	0.06	0.06	0.00
300YKB569	Yatay - CFCHS48.3X2.5	S 355	NC4	300.000	0.02	0.02	0.00
300YKB570	Yatay - CFCHS48.3X2.5	S 355	NC3	150.001	0.06	0.06	0.00
300YKB571	Yatay - CFCHS48.3X2.5	S 355	NC4	300.000	0.02	0.02	0.00

Member	css	mat	Case	dx [cm]	un.check [-]	sec.check [-]	stab.check [-]
300YKB572	Yatay - CFCHS48.3X2.5	S 355	NC3	149.999	0.06	0.06	0.00
300YKB573	Yatay - CFCHS48.3X2.5	S 355	NC4	300.000	0.02	0.02	0.00
300YKB574	Yatay - CFCHS48.3X2.5	S 355	NC3	149.999	0.06	0.06	0.00
300YKB575	Yatay - CFCHS48.3X2.5	S 355	NC4	300.000	0.02	0.02	0.00
300YKB576	Yatay - CFCHS48.3X2.5	S 355	NC3	149.999	0.06	0.06	0.00
300YKB577	Yatay - CFCHS48.3X2.5	S 355	NC4	300.000	0.02	0.02	0.00
300YKB578	Yatay - CFCHS48.3X2.5	S 355	NC3	150.001	0.06	0.06	0.00
300YKB579	Yatay - CFCHS48.3X2.5	S 355	NC4	300.000	0.02	0.02	0.00
300YKB580	Yatay - CFCHS48.3X2.5	S 355	NC3	149.999	0.07	0.07	0.00
300YKB581	Yatay - CFCHS48.3X2.5	S 355	NC4	300.000	0.03	0.03	0.00
300YKB582	Yatay - CFCHS48.3X2.5	S 355	NC3	150.001	0.06	0.06	0.00
300YKB583	Yatay - CFCHS48.3X2.5	S 355	NC4	300.000	0.02	0.02	0.00
300YKB584	Yatay - CFCHS48.3X2.5	S 355	NC3	150.001	0.06	0.06	0.00
300YKB585	Yatay - CFCHS48.3X2.5	S 355	NC4	300.000	0.02	0.02	0.00
300YKB586	Yatay - CFCHS48.3X2.5	S 355	NC3	149.999	0.06	0.06	0.00
300YKB587	Yatay - CFCHS48.3X2.5	S 355	NC4	300.000	0.02	0.02	0.00
300YKB588	Yatay - CFCHS48.3X2.5	S 355	NC3	150.001	0.06	0.06	0.00
300YKB589	Yatay - CFCHS48.3X2.5	S 355	NC4	300.000	0.02	0.02	0.00
300YKB590	Yatay - CFCHS48.3X2.5	S 355	NC3	149.999	0.06	0.06	0.00
300YKB591	Yatay - CFCHS48.3X2.5	S 355	NC4	300.000	0.02	0.02	0.00
300YKB592	Yatay - CFCHS48.3X2.5	S 355	NC3	150.001	0.06	0.06	0.00
300YKB593	Yatay - CFCHS48.3X2.5	S 355	NC4	300.000	0.02	0.02	0.00
300YKB594	Yatay - CFCHS48.3X2.5	S 355	NC3	149.999	0.06	0.06	0.00
300YKB595	Yatay - CFCHS48.3X2.5	S 355	NC4	300.000	0.02	0.02	0.00
300YKB596	Yatay - CFCHS48.3X2.5	S 355	NC3	150.001	0.06	0.06	0.00
300YKB597	Yatay - CFCHS48.3X2.5	S 355	NC4	300.000	0.02	0.02	0.00
300YKB598	Yatay - CFCHS48.3X2.5	S 355	NC3	150.001	0.07	0.07	0.00
300YKB599	Yatay - CFCHS48.3X2.5	S 355	NC3	300.000	0.03	0.03	0.00

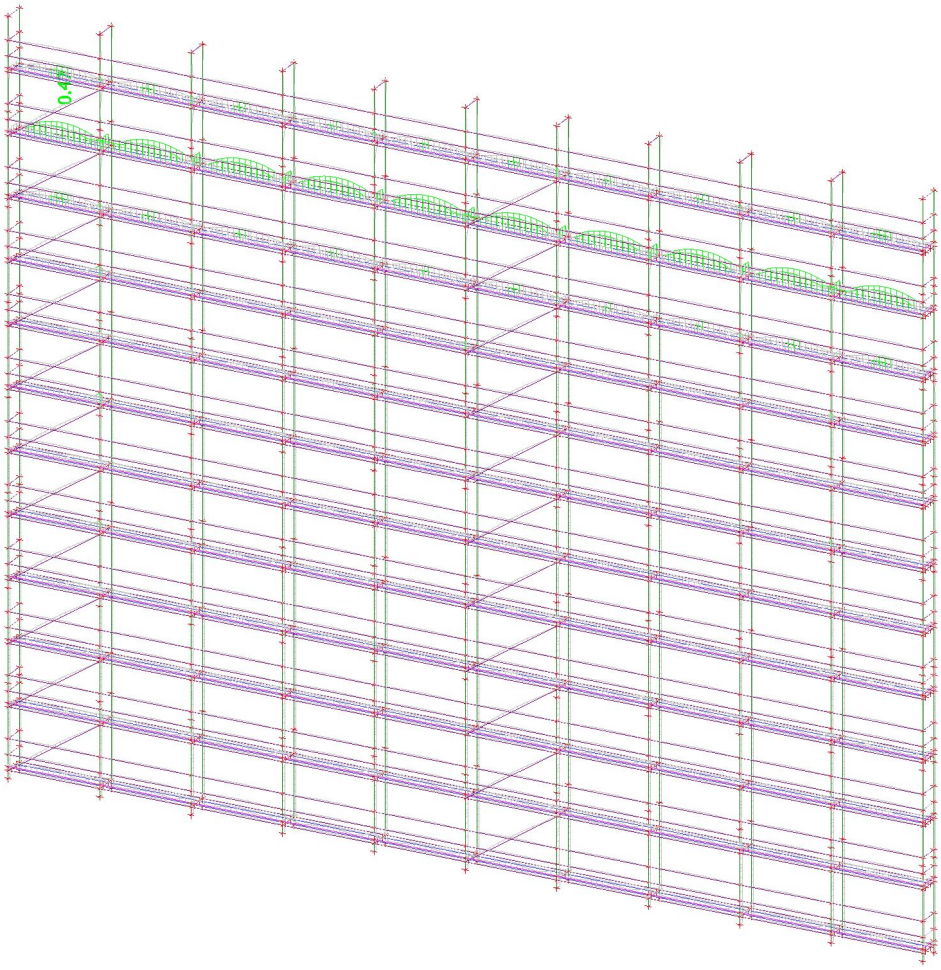

23. SEHİMLERİN KONTROLÜ

Nonlinear calculation, Extreme : Global, System : Principal
Selection : All
Class : NC SLS

Member	dx [cm]	Case - combination	uy [mm]	Rel uy [1/xx]	uz [mm]	Rel uz [1/xx]	Check uy [-]	Check uz [-]
Topukluk110	168.750	NC7	**-3.2**	**1/931**	-0.2	1/10000	**0.11**	0.01
300YKB335	131.250	NC7	**6.7**	1/4498	-0.3	1/8637	0.02	0.01
110YKB35	0.000	NC8	2.5	**1/296**	0.0	0	**0.34**	0.00
C.Platform301	149.999	NC5	0.0	1/10000	**-5.1**	**1/585**	0.00	**0.17**
300FDD6F12	100.001	NC7	0.0	1/10000	**2.0**	**1/1002**	0.00	**0.10**

24. SONUÇ

Rapor içerisinde iskele hesabında dikkate alınan boyutlar ve iskele yükseklikleri belirtilmiş, yapılan yüklemeler grafik ve sayısal olarak açıkca anlatılmıştır. İskele hesap yönetmeliklerine göre analizi yapılan bu iskelenin analiz sonuçlarından anlaşıldığı üzere rapor içerisinde belirtilen eleman kesiti, iskele boyutu, iskele kullanımı ve yükleme değerlerinin dışına çıkılmadığı takdirde iskelenin kullanımında herhangi bir sakınca yoktur.